THIS DRAWING IS UNPUBLISHED. RELEASED FOR PUBLICATION -,- .
© COPYRIGHT - BY TYCO ELECTRONICS CORPORATION. ALL RIGHTS RESERVED.

LOC	DIST
DW	—

REVISIONS

P	LTR	DESCRIPTION	DATE	DWN	APVD
	G	REVISED (ECR-11-006592)	07APR11	JC	WK

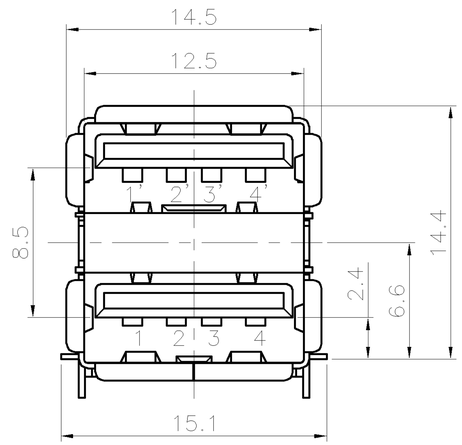

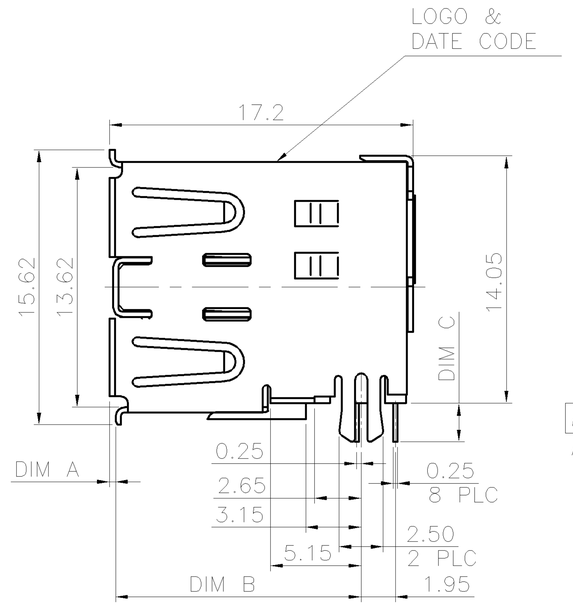

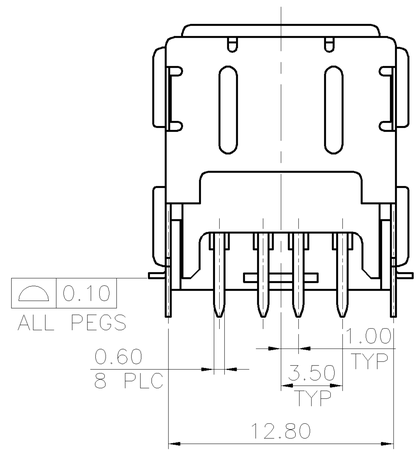

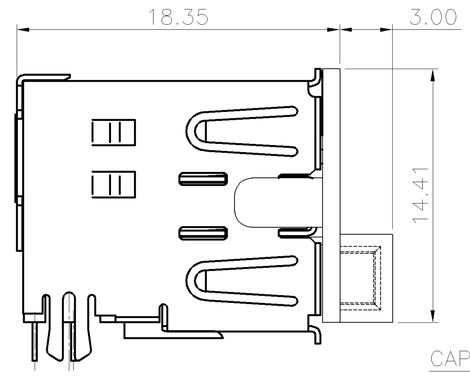

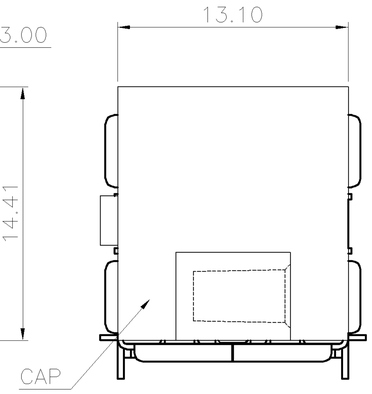

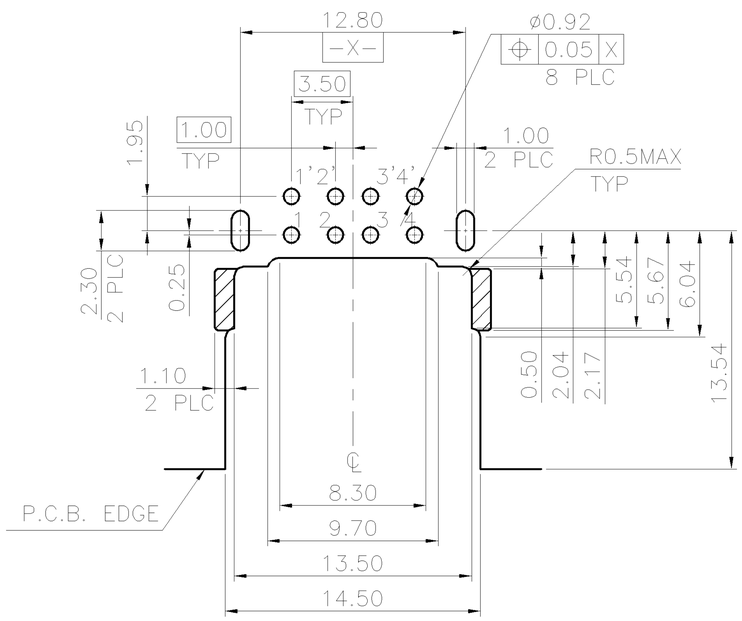

RECOMMEND P.C.B LAYOUT (THICKNESS 1.2~1.4mm)
(COMPONENT SIDE) TOLERANCE±0.05mm

NOTES:
1. MATERIAL:
   HOUSING: PA9T WITH 30% GF, UL 94V-0 RATED, BLACK COLOR.
   SPACER: PA9T WITH 30% GF, UL 94V-0 RATED, BLACK COLOR.
   CAP: PA9T WITH 30% GF, UL 94V-0 RATED, BLACK COLOR.
   CONTACT: PHOSPHOR BRONZE.
   FRONT SHIELD: BRASS.
   REAR SHIELD: SPCC.
   GROUNDING STRIP: BRASS.
2. FINISH:
   CONTACT: 0.762μm [30μ"] MIN. GOLD PLATING ON CONTACT AREA.
   3.048μm [120μ"] MIN. MATTE TIN PLATING ON SOLDER TAILS,
   WITH ENTIREC CONTACT UNDERPLATED 1.27mμ" [50μ"] MIN. NICKEL.
   FRONT SHIELD: 0.762μm [30μ"] MIN. NICKEL PLATING.
   0.762μm [30μ"] MIN. Cu UNDER PLATING OVERALL.
   REAR SHIELD: 0.762μm [30μ"] MIN. NICKEL PLATING.
   0.762μm [30μ"] MIN. Cu UNDER PLATING OVERALL.
   GROUNDING STRIP: 0.762μm [30μ"] MIN. NICKEL PLATING.
   0.762μm [30μ"] MIN. Cu UNDER PLATING OVERALL.
3. REFLOW SOLDER CAPABLE TO 260°C PER TE SPEC 109-201, CONDITION B.

DIM C	DIM B	DIM A	CAP	PACKAGE	PART NUMBER	NOTE
1.90	14.30	0	W/	TAPE & REEL	1734062-3	
2.20	13.95	0.35	W/O	TUBE	1734062-2	OBSOLETED
				TAPE & REEL	1734062-1	

THIS DRAWING IS A CONTROLLED DOCUMENT.

DIMENSIONS: MM

TOLERANCES UNLESS OTHERWISE SPECIFIED:

0 PLC	± -
1 PLC	± 0.35
2 PLC	± 0.25
3 PLC	± -
4 PLC	± -
ANGLES	± 3°

MATERIAL: SEE NOTE

FINISH: SEE NOTE

DWN F. YANG 10SEP2009
CHK S. CHIEN 10SEP2009
APVD W. KODAMA 10SEP2009

PRODUCT SPEC 108-57481

QUALIFICATION TEST REPORT 501-57557

WEIGHT 4.71 GRAMS

CUSTOMER DRAWING

TE Connectivity

NAME: USB CONNECTOR, A SERIES, STACKED, OFFSET TYPE

SIZE	CAGE CODE	DRAWING NO	RESTRICTED TO
A3	00779	C-1734062	—

SCALE — SHEET 1 OF 24 REV G

THIS DRAWING IS UNPUBLISHED. RELEASED FOR PUBLICATION -,- .
© COPYRIGHT - BY TYCO ELECTRONICS CORPORATION. ALL RIGHTS RESERVED.

LOC	DIST
DW	—

REVISIONS

P	LTR	DESCRIPTION	DATE	DWN	APVD
		SEE SHEET 1.			

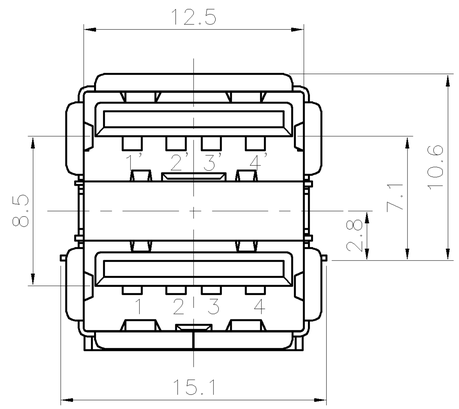

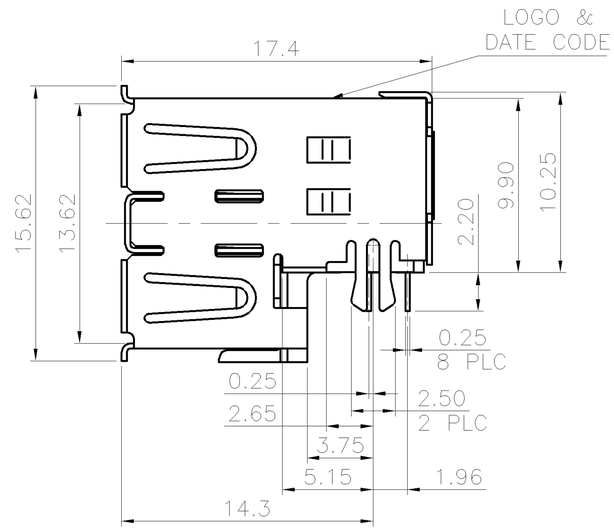

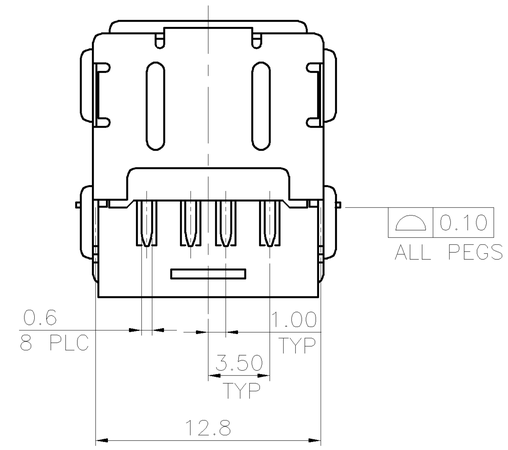

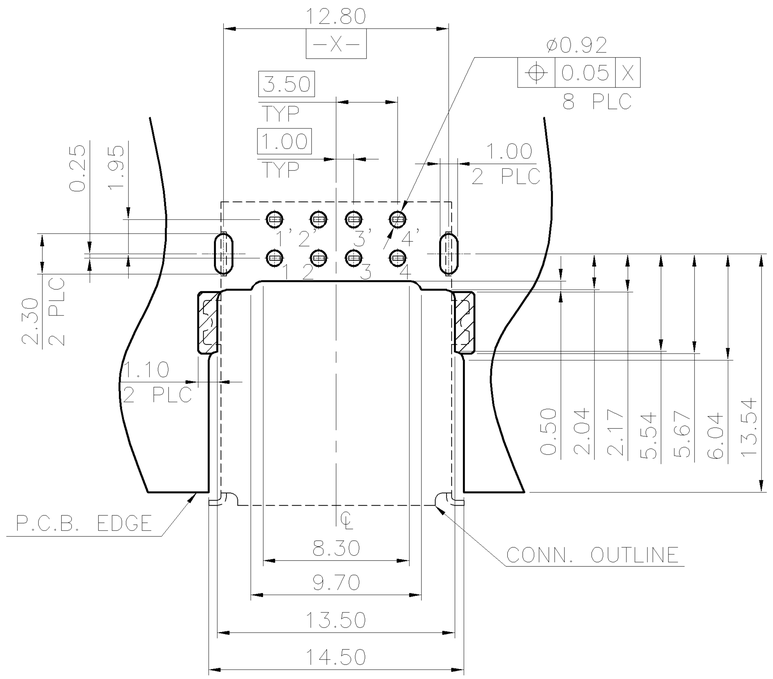

RECOMMEND P.C.B LAYOUT (THICKNESS 1.2~1.4mm)
(COMPONENT SIDE) TOLERANCE±0.05mm

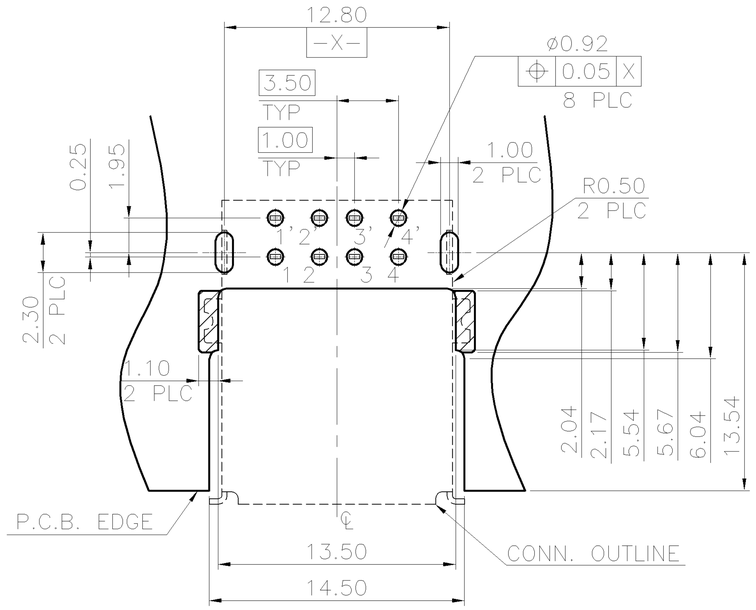

RECOMMEND P.C.B LAYOUT (THICKNESS 1.2~1.4mm)
(COMPONENT SIDE) TOLERANCE±0.05mm

NOTE:
1. MATERIAL:
   HOUSING: PA9T WITH 30% GF, UL 94V-0 RATED, BLACK COLOR.
   SPACER: PA9T WITH 30% GF, UL 94V-0 RATED, BLACK COLOR.
   CONTACT: PHOSPHOR BRONZE.
   FRONT SHIELD: BRASS.
   REAR SHIELD: SPCC.
   GROUNDING STRIP: BRASS.
2. FINISH:
   CONTACT: 0.762μm [30μ"] MIN. GOLD PLATING ON CONTACT AREA.
   3.048μm [120μ"] MIN. BRIGHT TIN PLATING ON SOLDER TAILS,
   WITH ENTIREC CONTACT UNDERPLATED 1.27μm [50μ"] MIN. NICKEL.
   FRONT SHIELD: 0.762μm [30μ"] MIN. NICKEL PLATING.
   0.762μm [30μ"] MIN. Cu UNDER PLATING OVERALL.
   REAR SHIELD: 0.762μm [30μ"] MIN. NICKEL PLATING.
   0.762μm [30μ"] MIN. Cu UNDER PLATING OVERALL.
   GROUNDING STRIP: 0.762μm [30μ"] MIN. NICKEL PLATING.
   0.762μm [30μ"] MIN. Cu UNDER PLATING OVERALL.
3. REFLOW SOLDER CAPABLE TO 260°C PER TE SPEC 109-201, CONDITION B.

NOTE	PACKAGE	PART NUMBER
OBSOLETED	TUBE	1-1734062-2
	TAPE & REEL	1-1734062-1

THIS DRAWING IS A CONTROLLED DOCUMENT.

DIMENSIONS: MM

TOLERANCES UNLESS OTHERWISE SPECIFIED:

0 PLC	± -
1 PLC	± 0.35
2 PLC	± 0.25
3 PLC	± -
4 PLC	± -
ANGLES	± 3°

MATERIAL: SEE NOTE

FINISH: SEE NOTE

DWN
CHK
APVD
PRODUCT SPEC
QUALIFICATION TEST REPORT
WEIGHT 4.71 GRAMS

TE Connectivity

NAME: USB CONNECTOR, A SERIES, STACKED, OFFSET TYPE

SIZE	CAGE CODE	DRAWING NO	RESTRICTED TO
A3	00779	C-1734062	—

CUSTOMER DRAWING | SCALE — | SHEET 2 OF 24 | REV G

THIS DRAWING IS UNPUBLISHED. RELEASED FOR PUBLICATION -,- .
© COPYRIGHT - BY TYCO ELECTRONICS CORPORATION. ALL RIGHTS RESERVED.

LOC	DIST
DW	—

REVISIONS

P	LTR	DESCRIPTION	DATE	DWN	APVD
		SEE SHEET 1.			

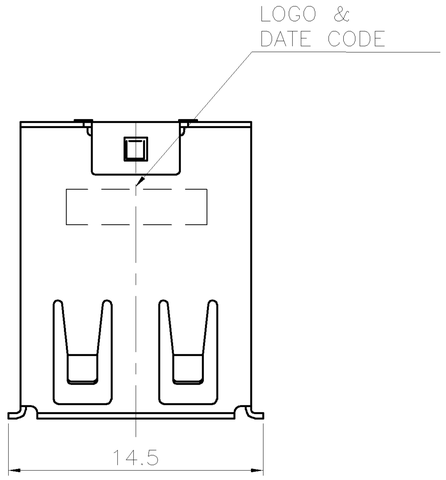

NOTE:
1. MATERIAL:
   HOUSING: PA9T WITH 30% GF, UL 94V-0 RATED, BLACK COLOR.
   SPACER: PA9T WITH 30% GF, UL 94V-0 RATED, BLACK COLOR.
   CONTACT: PHOSPHOR BRONZE.
   FRONT SHIELD: BRASS.
   REAR SHIELD: SPCC.
   GROUNDING STRIP: BRASS.
2. FINISH:
   CONTACT: 0.76μ"m [30μ"] MIN. GOLD PLATING ON CONTACT AREA.
   3.048μ"m [120μ"] MIN. BRIGHT TIN PLATING ON SOLDER TAIL,
   WITH ENTIRE CONTACT UNDERPLATED 1.27mμ" [50μ"] MIN. NICKEL.
   FRONT SHIELD: 0.76μ"m [30μ"] MIN. NICKEL PLATING.
   0.76μ"m [30μ"] MIN. Cu UNDER PLATING OVERALL.
   REAR SHIELD: 0.762μm [30μ"] MIN. NICKEL PLATING.
   0.762μm [30μ"] MIN. Cu UNDER PLATING OVERALL.
   GROUNDING STRIP: 0.762μm [30μ"] MIN. NICKEL PLATING.
   0.762μm [30μ"] MIN. Cu UNDER PLATING OVERALL.
3. REFLOW SOLDER CAPABLE TO 260°C PER TE
   SPEC 109-201, CONDITION B.

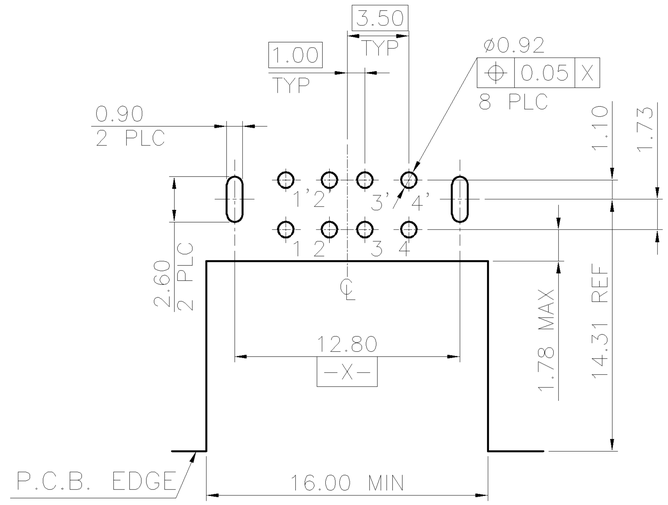

RECOMMEND P.C.B LAYOUT (THICKNESS 1.2mm)
(COMPONENT SIDE) TOLERANCE±0.05mm

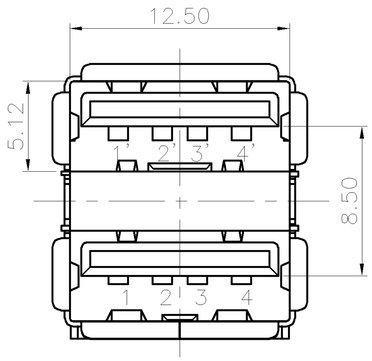

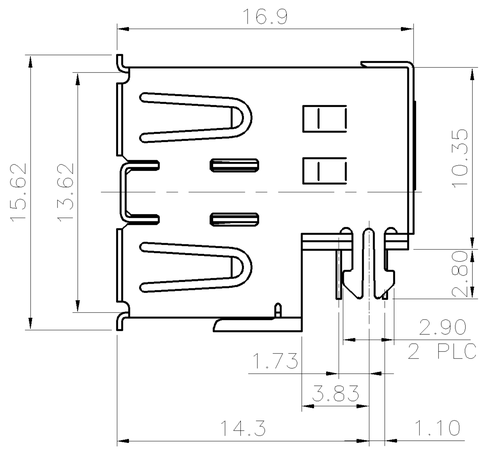

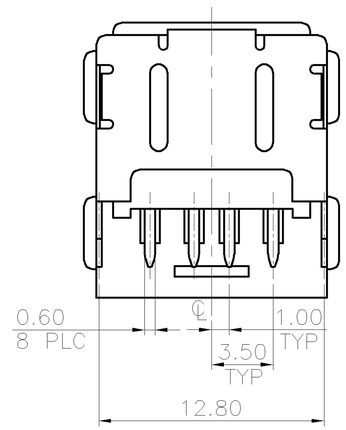

TRAY	2-1734062-2
TUBE	2-1734062-1
PACKAGE	PART NUMBER

THIS DRAWING IS A CONTROLLED DOCUMENT.

DIMENSIONS: MM

TOLERANCES UNLESS OTHERWISE SPECIFIED:

0 PLC	± -
1 PLC	± 0.35
2 PLC	± 0.25
3 PLC	± -
4 PLC	± -
ANGLES	± 3°

MATERIAL: SEE NOTE

FINISH: SEE NOTE

DWN
CHK
APVD
PRODUCT SPEC
QUALIFICATION TEST REPORT
WEIGHT 4.71 GRAMS

TE Connectivity

NAME: USB CONNECTOR, A SERIES, STACKED, OFFSET TYPE

SIZE	CAGE CODE	DRAWING NO	RESTRICTED TO
A3	00779	C-1734062	—

CUSTOMER DRAWING | SCALE — | SHEET 3 OF 24 | REV G

THIS DRAWING IS UNPUBLISHED. RELEASED FOR PUBLICATION -,- .
© COPYRIGHT - BY TYCO ELECTRONICS CORPORATION. ALL RIGHTS RESERVED.

LOC	DIST
DW	—

REVISIONS

P	LTR	DESCRIPTION	DATE	DWN	APVD
		SEE SHEET 1.			

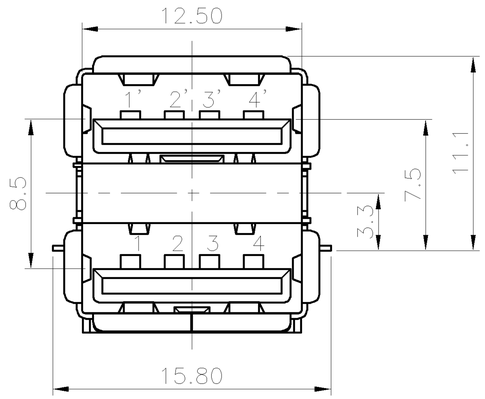

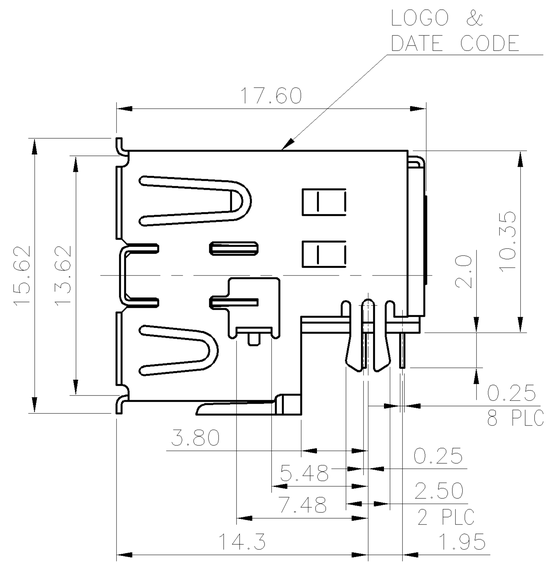

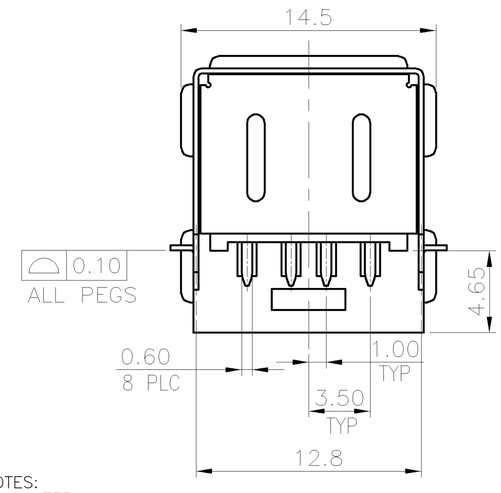

NOTES:
1. MATERIAL:
   HOUSING: PA9T WITH 30% GF, UL 94V-0 RATED, BLACK COLOR.
   SPACER: PA9T WITH 30% GF, UL 94V-0 RATED, BLACK COLOR.
   CONTACT: PHOSPHOR BRONZE.
   FRONT SHIELD: BRASS.
   REAR SHIELD: SPCC.
   GROUNDING STRIP: STAINLESS.
2. FINISH:
   CONTACT: 0.762μm [30μ"] MIN. GOLD PLATING ON CONTACT AREA.
   3.048μm [120μ"] MIN. MATTE TIN PLATING ON SOLDER TAILS,
   1.27μm [50μ"] MIN. NICKEL UNDERPLATED WITH ENTIRE CONTACT .
   FRONT SHIELD: 0.762μm [30μ"] MIN. NICKEL PLATING.
   0.762μm [30μ"] MIN. Cu UNDER PLATING OVERALL.
   REAR SHIELD: 0.762μm [30μ"] MIN. NICKEL PLATING.
   0.762μm [30μ"] MIN. Cu UNDER PLATING OVERALL.
3. FINISH:
   CONTACT: 0.254μm [10μ"] MIN. GOLD PLATING ON CONTACT AREA.
   3.048μm [120μ"] MIN. MATTE TIN PLATING ON SOLDER TAILS,
   1.27μm [50μ"] MIN. NICKEL UNDERPLATED WITH ENTIRE CONTACT.
   FRONT SHIELD: 0.762μm [30μ"] MIN. NICKEL PLATING.
   0.762μm [30μ"] MIN. Cu UNDER PLATING OVERALL.
   SPUTTERING/BLACK PLATING IN FRONT SURFACE.
   REAR SHIELD: 0.762μm [30μ"] MIN. NICKEL PLATING.
   0.762μm [30μ"] MIN. Cu UNDER PLATING OVERALL.
   GROUNDING STRIP: SPUTTERING/BLACK PLATING IN FRONT SURFACE.
4. REFLOW SOLDER CAPABLE TO 260°C PER TE SPEC 109-201, CONDITION B.

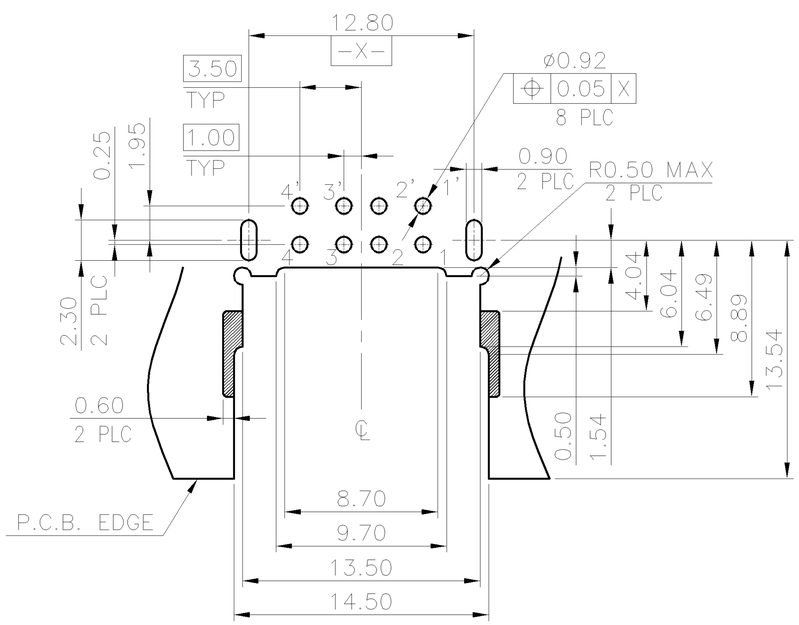

RECOMMEND P.C.B LAYOUT (THICKNESS 1.4~1.6mm)
(COMPONENT SIDE) TOLERANCE±0.05mm

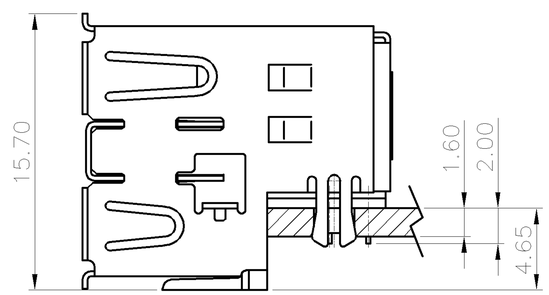

RECOMMENDED MOUNT DIMENSION

3	TAPE & REEL	3-1734062-4
2	TAPE & REEL	3-1734062-3
	TUBE	3-1734062-2
	TRAY	3-1734062-1
FINISH	PACKAGE	PART NUMBER

THIS DRAWING IS A CONTROLLED DOCUMENT.

DIMENSIONS: MM

TOLERANCES UNLESS OTHERWISE SPECIFIED:

0 PLC	± -
1 PLC	± 0.35
2 PLC	± 0.25
3 PLC	± -
4 PLC	± -
ANGLES	± 3°

MATERIAL: SEE NOTE

FINISH: SEE NOTE

DWN
CHK
APVD
PRODUCT SPEC
QUALIFICATION TEST REPORT
WEIGHT 4.71 GRAMS

TE Connectivity

NAME: USB CONNECTOR, A SERIES, STACKED, OFFSET TYPE

SIZE	CAGE CODE	DRAWING NO	RESTRICTED TO
A3	00779	C-1734062	—

CUSTOMER DRAWING | SCALE — | SHEET 4 OF 24 | REV G

THIS DRAWING IS UNPUBLISHED. RELEASED FOR PUBLICATION -,- .
© COPYRIGHT - BY TYCO ELECTRONICS CORPORATION. ALL RIGHTS RESERVED.

LOC	DIST
DW	—

REVISIONS

P	LTR	DESCRIPTION	DATE	DWN	APVD
		SEE SHEET 1.			

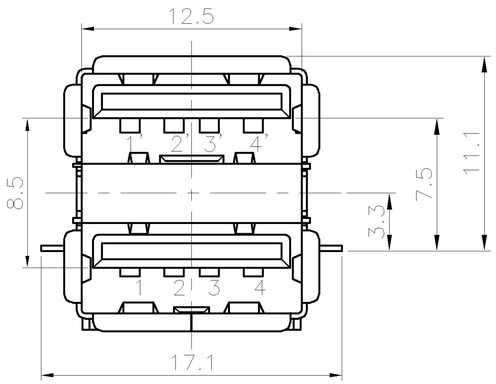

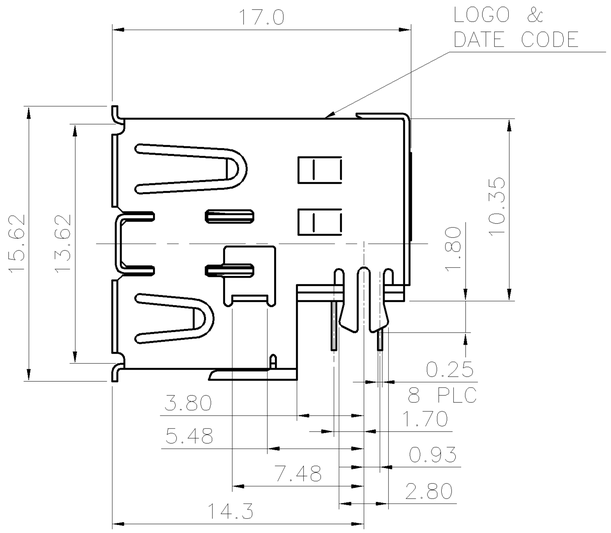

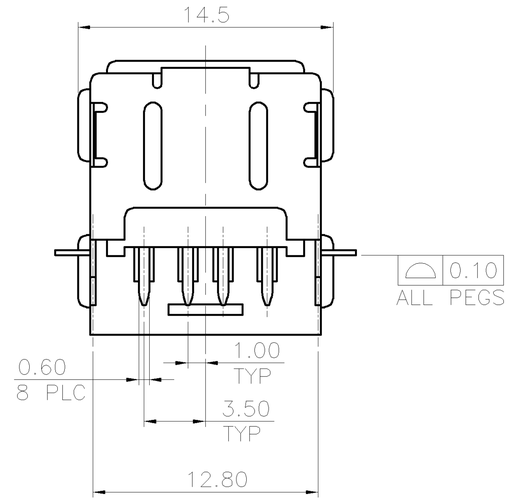

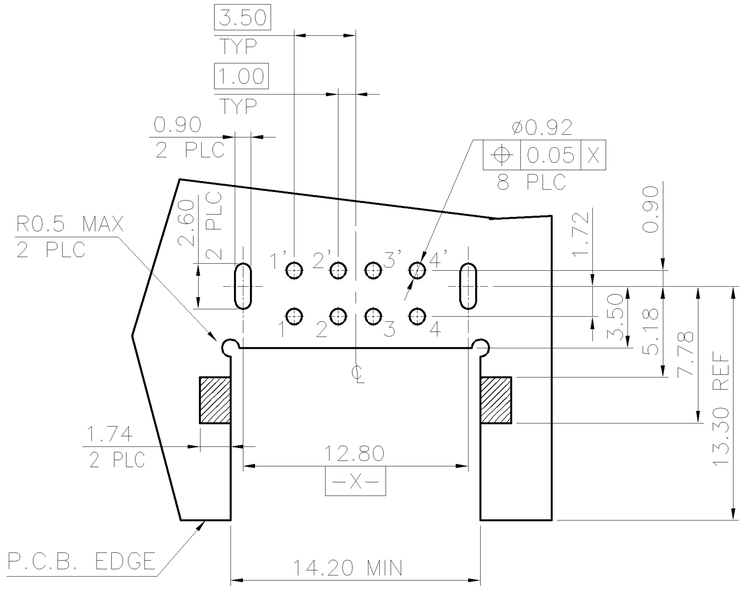

RECOMMEND P.C.B LAYOUT (THICKNESS 1.0~1.4mm)
(COMPONENT SIDE) TOLERANCE±0.05mm

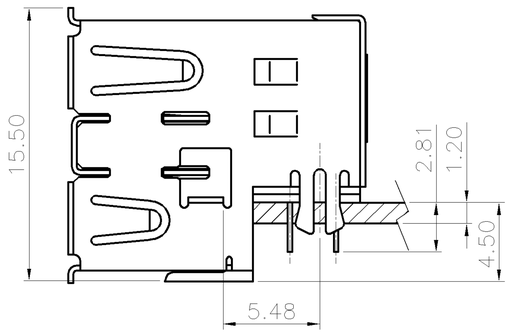

RECOMMENDED MOUNT DIMENSION

NOTES:
1. MATERIAL:
   HOUSING: PA9T WITH 30% GF, UL 94V-0 RATED, BLACK COLOR.
   SPACER: PA9T WITH 30% GF, UL 94V-0 RATED, BLACK COLOR.
   CONTACT: PHOSPHOR BRONZE.
   FRONT SHIELD: BRASS.
   REAR SHIELD: SPCC.
   GROUNDING STRIP: BRASS.
2. FINISH:
   CONTACT: 0.762μm [30μ"] MIN. GOLD PLATING ON CONTACT AREA.
   3.048μm [120μ"] MIN. BRIGHT TIN PLATING ON SOLDERTAILS.
   WITH ENTIREC CONTACT UNDERPLATED 1.27μm [50μ"] MIN. NICKEL.
   FRONT SHIELD: 0.762μm [30μ"] MIN. NICKEL PLATING.
   0.762μm [30μ"] MIN. Cu UNDER PLATING OVERALL.
   REAR SHIELD: 0.762μm [30μ"] MIN. NICKEL PLATING.
   0.762μm [30μ"] MIN. Cu UNDER PLATING OVERALL.
   GROUNDING STRIP: 0.762μm [30μ"] MIN. NICKEL PLATING.
   0.762μm [30μ"] MIN. Cu UNDER PLATING OVERALL.
3. REFLOW SOLDER CAPABLE TO 260°C PER TE SPEC 109-201, CONDITION B.

TUBE	4-1734062-1
PACKAGE	PART NUMBER

THIS DRAWING IS A CONTROLLED DOCUMENT.

DIMENSIONS: MM

TOLERANCES UNLESS OTHERWISE SPECIFIED:

0 PLC	± -
1 PLC	± 0.35
2 PLC	± 0.25
3 PLC	± -
4 PLC	± -
ANGLES	± 3°

MATERIAL: SEE NOTE

FINISH: SEE NOTE

DWN
CHK
APVD
PRODUCT SPEC
QUALIFICATION TEST REPORT
WEIGHT 4.71 GRAMS

TE Connectivity

NAME: USB CONNECTOR, A SERIES, STACKED, OFFSET TYPE

SIZE	CAGE CODE	DRAWING NO	RESTRICTED TO
A3	00779	C-1734062	—

CUSTOMER DRAWING | SCALE — | SHEET 5 OF 24 | REV G

THIS DRAWING IS UNPUBLISHED. RELEASED FOR PUBLICATION -,- .
© COPYRIGHT - BY TYCO ELECTRONICS CORPORATION. ALL RIGHTS RESERVED.

LOC	DIST
DW	—

REVISIONS

P	LTR	DESCRIPTION	DATE	DWN	APVD
		SEE SHEET 1.			

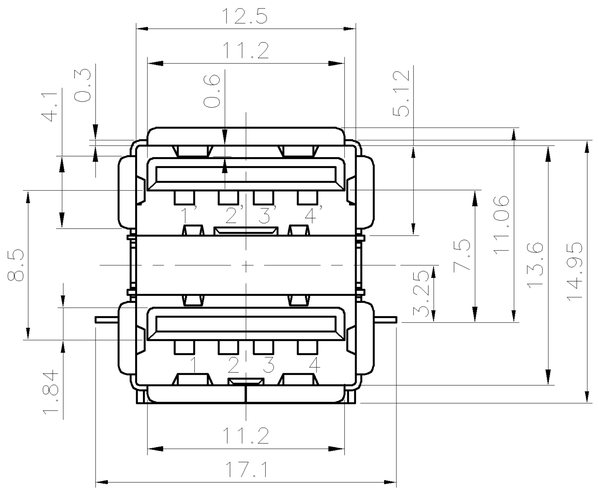

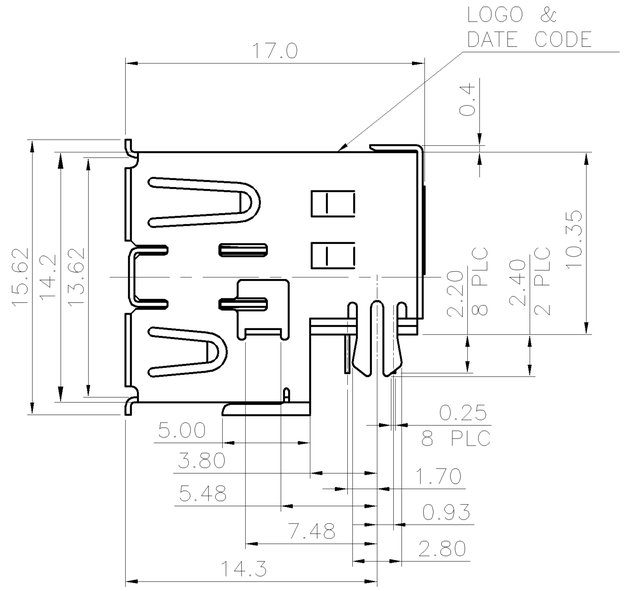

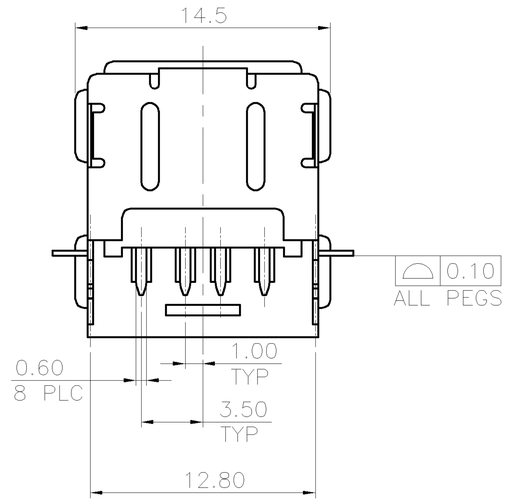

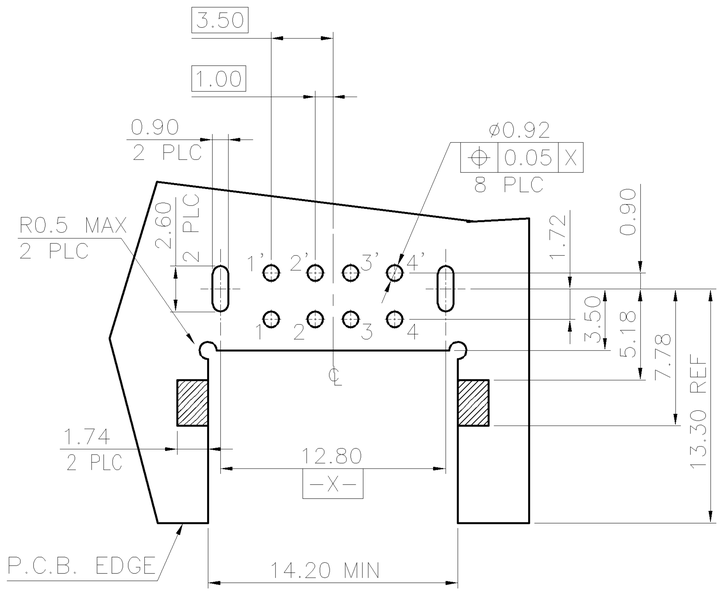

RECOMMEND P.C.B LAYOUT (THICKNESS 1.6mm)
(COMPONENT SIDE) TOLERANCE±0.05mm

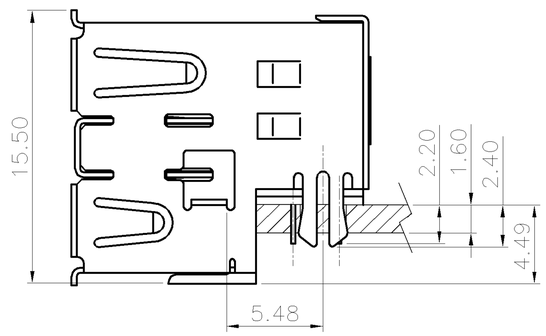

RECOMMENDED MOUNT DIMENSION

NOTES:
1. MATERIAL:
   HOUSING: PA9T WITH 30% GF, UL 94V-0 RATED, BLACK COLOR.
   SPACER: PA9T WITH 30% GF, UL 94V-0 RATED, BLACK COLOR.
   CONTACT: PHOSPHOR BRONZE.
   FRONT SHIELD: SUS.
   REAR SHIELD: SPCC.
   GROUNDING STRIP: SUS.
2. FINISH:
   CONTACT: 0.762μm [30μ"] MIN. GOLD PLATING ON CONTACT AREA.
   3.048μm [120μ"] MIN. BRIGHT TIN PLATING ON SOLDERTAILS.
   WITH ENTIREC CONTACT UNDERPLATED 1.27μm [50μ"] MIN. NICKEL.
   FRONT SHIELD: 0.762μm [30μ"] MIN. NICKEL PLATING OVERALL.
   REAR SHIELD: 0.762μm [30μ"] MIN. NICKEL PLATING.
   0.762μm [30μ"] MIN. Cu UNDER PLATING OVERALL.
3. REFLOW SOLDER CAPABLE TO 260°C PER TE SPEC 109-201, CONDITION B.

TAPE & REEL	4-1734062-2
PACKAGE	PART NUMBER

THIS DRAWING IS A CONTROLLED DOCUMENT.

DIMENSIONS: MM

TOLERANCES UNLESS OTHERWISE SPECIFIED:

0 PLC	± -
1 PLC	± 0.35
2 PLC	± 0.25
3 PLC	± -
4 PLC	± -
ANGLES	± 3°

MATERIAL: SEE NOTE

FINISH: SEE NOTE

DWN
CHK
APVD
PRODUCT SPEC
QUALIFICATION TEST REPORT
WEIGHT 4.71 GRAMS

TE Connectivity

NAME: USB CONNECTOR, A SERIES, STACKED, OFFSET TYPE

SIZE	CAGE CODE	DRAWING NO	RESTRICTED TO
A3	00779	C-1734062	—

CUSTOMER DRAWING | SCALE — | SHEET 6 OF 24 | REV G

THIS DRAWING IS UNPUBLISHED. RELEASED FOR PUBLICATION -,- .
© COPYRIGHT - BY TYCO ELECTRONICS CORPORATION. ALL RIGHTS RESERVED.

LOC	DIST
DW	—

REVISIONS

P	LTR	DESCRIPTION	DATE	DWN	APVD
		SEE SHEET 1.			

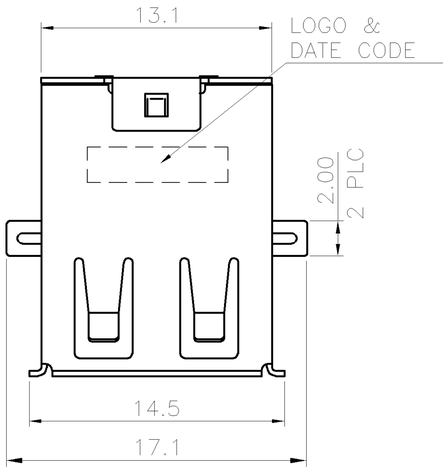

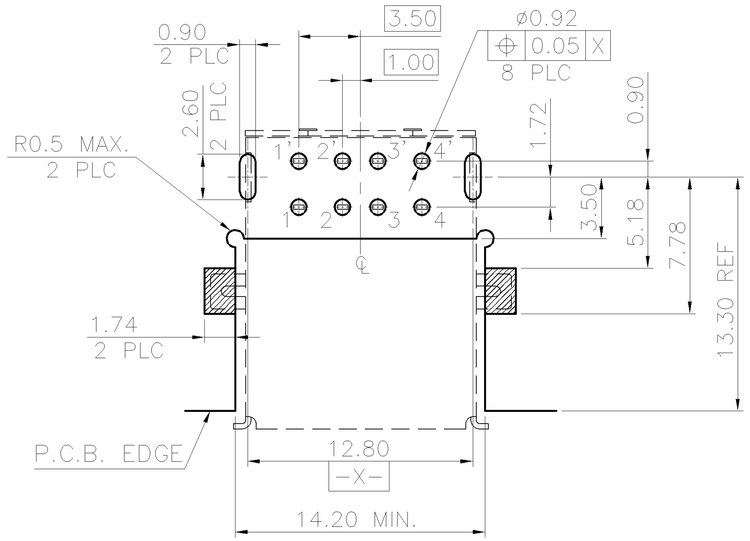

RECOMMEND P.C.B LAYOUT (THICKNESS 1.6mm)
(COMPONENT SIDE) TOLERANCE±0.05mm

NOTES:
1. MATERIAL:
   HOUSING: PA9T WITH 30% GF, UL 94V-0 RATED, BLACK COLOR.
   SPACER: PA9T WITH 30% GF, UL 94V-0 RATED, BLACK COLOR.
   CONTACT: PHOSPHOR BRONZE.
   FRONT SHIELD: SUS.
   REAR SHIELD: SPCC.
   GROUNDING STRIP: SUS.
2. FINISH:
   CONTACT: 0.762μm [30μ"] MIN. GOLD PLATING ON CONTACT AREA,
   2.540μm [100μ"] MIN. BRIGHT TIN PLATING ON SOLDERTAILS,
   WITH ENTIREC CONTACT UNDERPLATED 1.27μm [50μ"] MIN. NICKEL.
   FRONT SHIELD: 0.762μm [30μ"] MIN. NICKEL PLATING OVERALL.
   REAR SHIELD: 0.762μm [30μ"] MIN. NICKEL PLATING,
   0.762μm [30μ"] MIN. Cu UNDER PLATING OVERALL.
3. REFLOW SOLDER CAPABLE TO 260°C PER TE SPEC 109-201, CONDITION B.

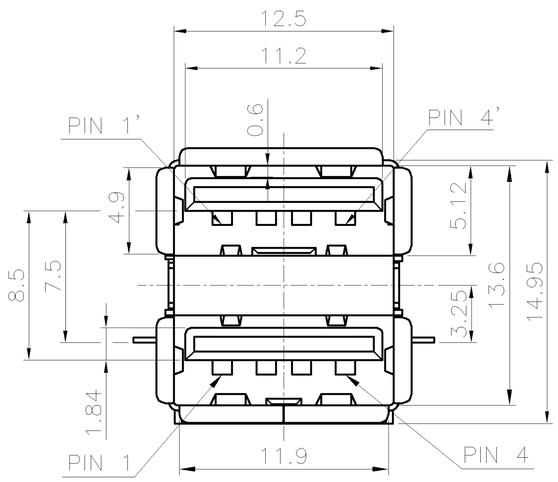

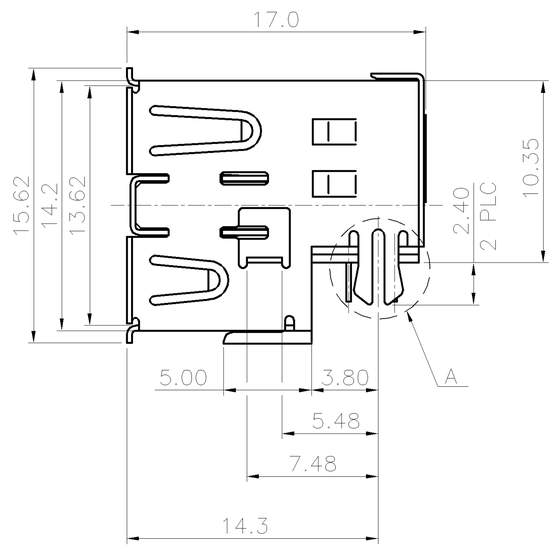

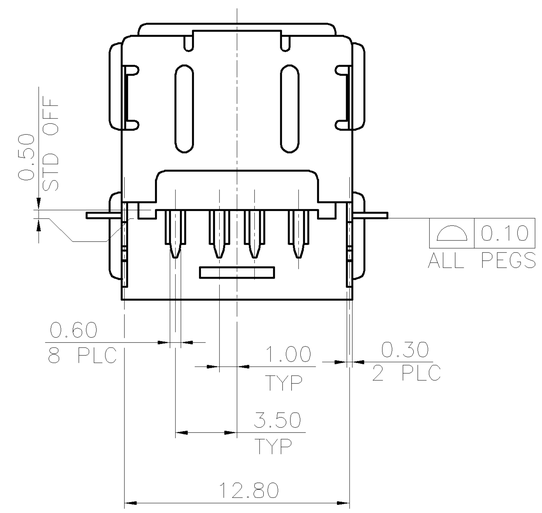

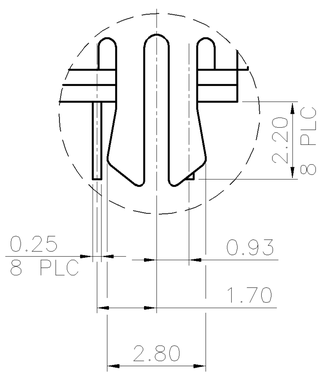

DETAIL A
SCALE 2:1

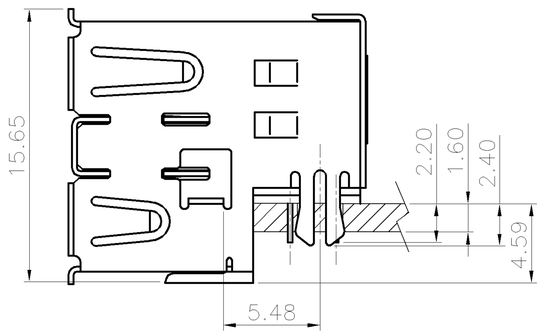

RECOMMENDED MOUNT DIMENSION

TAPE & REEL	4-1734062-3
PACKAGE	PART NUMBER

THIS DRAWING IS A CONTROLLED DOCUMENT.

DIMENSIONS: MM

TOLERANCES UNLESS OTHERWISE SPECIFIED:

0 PLC	± -
1 PLC	± 0.35
2 PLC	± 0.25
3 PLC	± -
4 PLC	± -
ANGLES	± 3°

MATERIAL: SEE NOTE

FINISH: SEE NOTE

DWN
CHK
APVD
PRODUCT SPEC
QUALIFICATION TEST REPORT
WEIGHT 4.25 GRAMS

TE Connectivity

NAME: USB CONNECTOR, A SERIES, STACKED, OFFSET TYPE

SIZE	CAGE CODE	DRAWING NO	RESTRICTED TO
A3	00779	C-1734062	—

CUSTOMER DRAWING | SCALE — | SHEET 7 OF 24 | REV G

THIS DRAWING IS UNPUBLISHED. RELEASED FOR PUBLICATION -,- .
© COPYRIGHT - BY TYCO ELECTRONICS CORPORATION. ALL RIGHTS RESERVED.

LOC	DIST
DW	—

REVISIONS

P	LTR	DESCRIPTION	DATE	DWN	APVD
		SEE SHEET 1.			

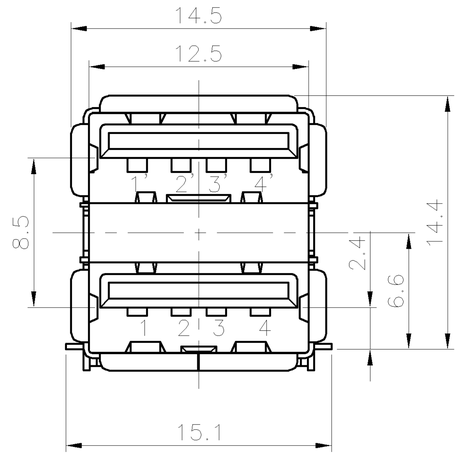

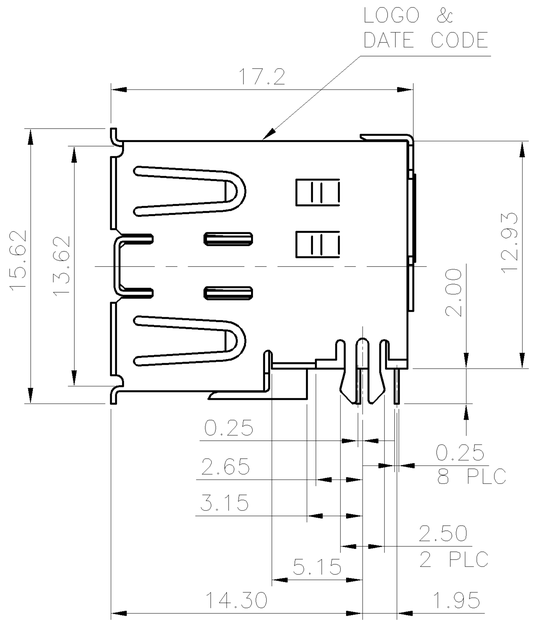

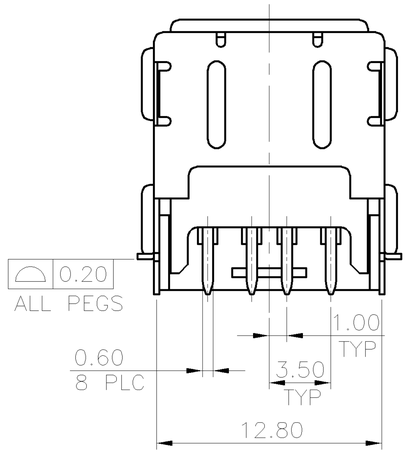

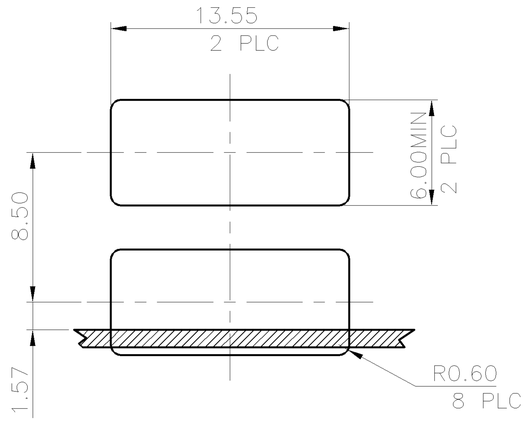

MOUNTING PANEL CUTOUT
(INTERNAL SIDE)

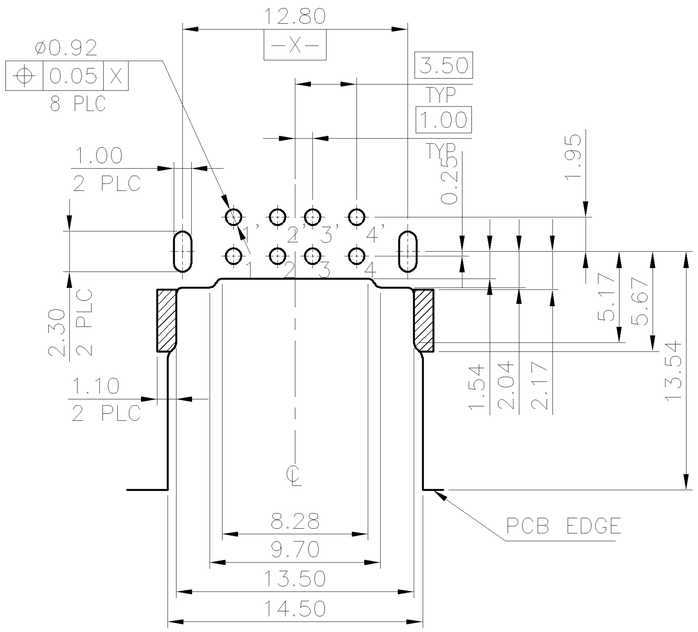

RECOMMEND P.C.B LAYOUT (THICKNESS 1.0mm)
(COMPONENT SIDE) TOLERANCE±0.05mm

NOTES:
1. MATERIAL:
   HOUSING: PA9T WITH 30% GF, UL 94V-0 RATED, BLACK COLOR.
   SPACER: PA9T WITH 30% GF, UL 94V-0 RATED, BLACK COLOR.
   CONTACT: PHOSPHOR BRONZE.
   FRONT SHIELD: BRASS.
   REAR SHIELD: SPCC.
   GROUNDING STRIP: BRASS.
2. FINISH :
   CONTACT: 0.762μm [30μ"] MIN. GOLD PLATING ON CONTACT AREA.
   3.048μm [120μ"] MIN. BRIGHT-TIN PLATING ON SOLDERTAILS.
   WITH ENTIREC CONTACT UNDERPLATED 1.27mμ" [50μ"] MIN. NICKEL.
   FRONT SHIELD: 0.762μm [30μ"] MIN. NICKEL PLATING.
   0.762μm [30μ"] MIN. Cu UNDER PLATING OVERALL.
   REAR SHIELD: 0.762μm [30μ"] MIN. NICKEL PLATING.
   0.762μm [30μ"] MIN. Cu UNDER PLATING OVERALL.
   GROUNDING STRIP: 0.762μm [30μ"] MIN. NICKEL PLATING.
   0.762μm [30μ"] MIN. Cu UNDER PLATING OVERALL.
3. REFLOW SOLDER CAPABLE TO 260°C PER TE SPEC 109-201, CONDITION B.

PACKAGE	PART NUMBER
OBSOLETE TRAY	5-1734062-2
OBSOLETE TAPE & REEL	5-1734062-1

THIS DRAWING IS A CONTROLLED DOCUMENT.

DIMENSIONS: MM

TOLERANCES UNLESS OTHERWISE SPECIFIED:

0 PLC	± -
1 PLC	± 0.35
2 PLC	± 0.25
3 PLC	± -
4 PLC	± -
ANGLES	± 3°

MATERIAL: SEE NOTE

FINISH: SEE NOTE

DWN
CHK
APVD
PRODUCT SPEC
QUALIFICATION TEST REPORT
WEIGHT 4.71 GRAMS

TE Connectivity

NAME: USB CONNECTOR, A SERIES, STACKED, OFFSET TYPE

SIZE	CAGE CODE	DRAWING NO	RESTRICTED TO
A3	00779	C-1734062	—

CUSTOMER DRAWING | SCALE — | SHEET 8 OF 24 | REV G

THIS DRAWING IS UNPUBLISHED. RELEASED FOR PUBLICATION -,- .
© COPYRIGHT - BY TYCO ELECTRONICS CORPORATION. ALL RIGHTS RESERVED.

LOC	DIST
DW	—

REVISIONS

P	LTR	DESCRIPTION	DATE	DWN	APVD
		SEE SHEET 1.			

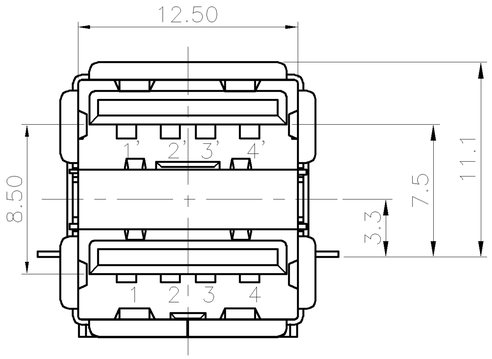

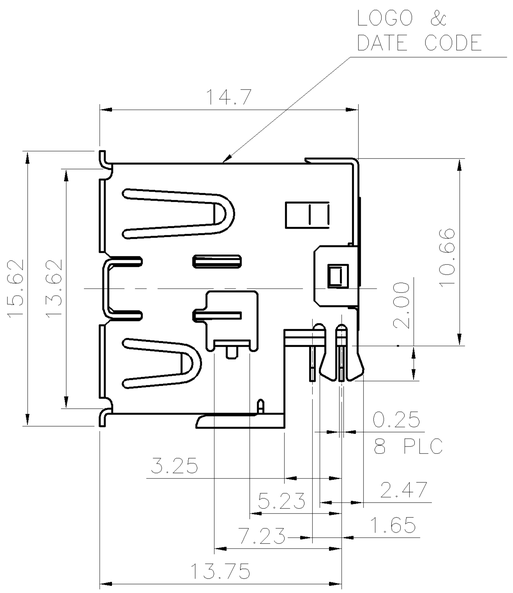

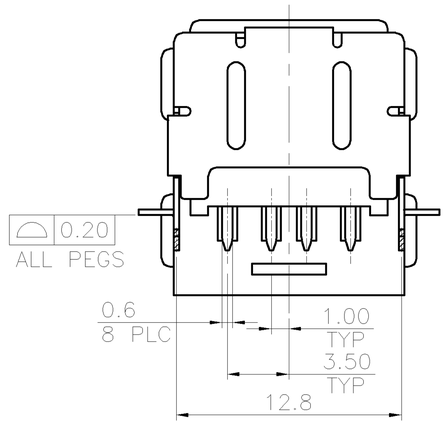

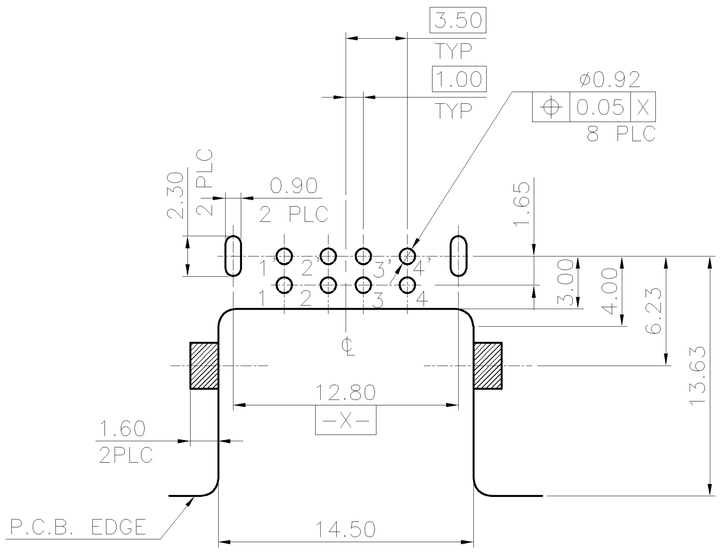

RECOMMEND P.C.B LAYOUT (THICKNESS 1.2mm)
(COMPONENT SIDE) TOLERANCE±0.05mm

NOTES:
1.MATERIAL:
HOUSING: PA9T WITH 30% GF, UL 94V-0 RATED, BLACK COLOR.
SPACER: PA9T WITH 30% GF, UL 94V-0 RATED, BLACK COLOR.
CONTACT: PHOSPHOR BRONZE.
FRONT SHELL: BRASS.
REAR SHELL: SPCC.
GROUNDING STRIP: STAINLESS.
2.FINISH:
CONTACT: 0.762μm [30μ"] MIN. GOLD PLATING ON CONTACT AREA.
3.048μm [120μ"] MIN. BRIGHT TIN PLATING ON SOLDER TAILS,
WITH ENTIREC CONTACT UNDERPLATED 1.27μm [50μ"] MIN. NICKEL.
FRONT SHELL: 0.762μm [30μ"] MIN. NICKEL PLATED.
0.762μm [30μ"] MIN. Cu UNDERPLATING OVERALL.
REAR SHELL: 0.762μm [30μ"] MIN. NICKEL PLATED.
0.762μm [30μ"] MIN. Cu UNDERPLATING OVERALL.
GROUNDING SHELL: 0.762μm [30μ"] MIN. NICKEL PLATED.
0.762μm [30μ"] MIN. Cu UNDERPLATING OVERALL.
3. REFLOW SOLDER CAPABLE TO 260°C PER TE
SPEC 109-201, CONDITION B.

TAPE & REEL	6-1734062-1
PACKAGE	PART NUMBER

THIS DRAWING IS A CONTROLLED DOCUMENT.

DIMENSIONS: MM

TOLERANCES UNLESS OTHERWISE SPECIFIED:

0 PLC	± -
1 PLC	± 0.35
2 PLC	± 0.25
3 PLC	± -
4 PLC	± -
ANGLES	± 3°

MATERIAL: SEE NOTE
FINISH: SEE NOTE

DWN
CHK
APVD
PRODUCT SPEC
QUALIFICATION TEST REPORT
WEIGHT 4.71 GRAMS
CUSTOMER DRAWING

TE Connectivity

NAME: USB CONNECTOR, A SERIES, STACKED, OFFSET TYPE

SIZE	CAGE CODE	DRAWING NO	RESTRICTED TO
A3	00779	C-1734062	—

SCALE —
SHEET 9 OF 24
REV G

THIS DRAWING IS UNPUBLISHED. RELEASED FOR PUBLICATION -,- .
© COPYRIGHT - BY TYCO ELECTRONICS CORPORATION. ALL RIGHTS RESERVED.

LOC	DIST
DW	—

REVISIONS

P	LTR	DESCRIPTION	DATE	DWN	APVD
		SEE SHEET 1.			

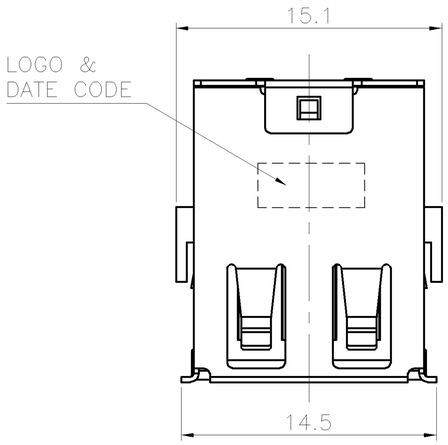

NOTES:
1. MATERIAL:
   HOUSING: PA9T WITH 30% GF, UL 94V-0 RATED, BLACK COLOR.
   CONTACT: PHOSPHOR BRONZE.
   FRONT SHIELD: BRASS.
   REAR SHIELD: SPCC.
   GROUNDING STRIP: BRASS.
2. FINISH:
   CONTACT: 0.762μm [30μ"] MIN. GOLD PLATING ON CONTACT AREA.
   3.048μm [120μ"] MIN. BRIGHT TIN PLATING ON SOLDERTAILS.
   WITH ENTIREC CONTACT UNDERPLATED 1.27μm [50μ"] MIN. NICKEL.
   FRONT SHELL: 0.762μm [30μ"] MIN. NICKEL PLATED.
   0.762μm [30μ"] MIN. Cu UNDERPLATING OVERALL.
   REAR SHELL: 0.762μm [30μ"] MIN. NICKEL PLATED.
   0.762μm [30μ"] MIN. Cu UNDERPLATING OVERALL.
   GROUNDING STRIP: 0.762μm [30μ"] MIN. NICKEL PLATING.
   0.762μm [30μ"] MIN. Cu UNDER PLATING OVERALL.
3. REFLOW SOLDER CAPABLE TO 260°C PER TE
   SPEC 109-201, CONDITION B.

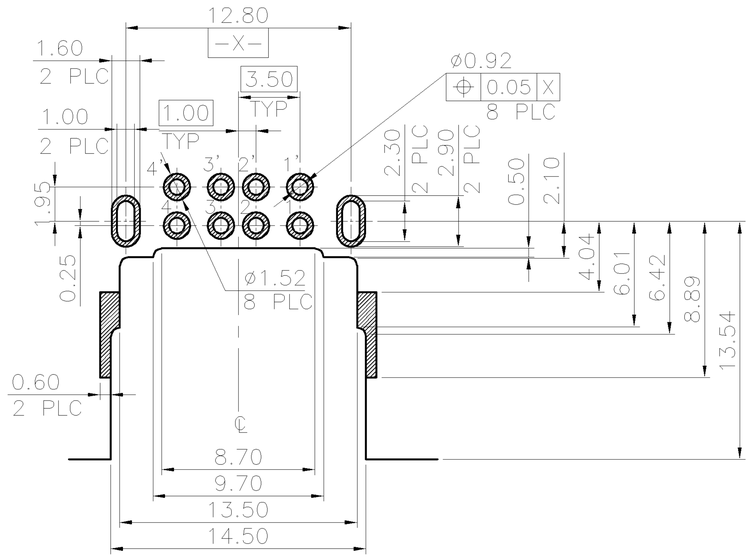

RECOMMEND P.C.B LAYOUT (THICKNESS 1.2mm)
(COMPONENT SIDE) TOLERANCE±0.05mm

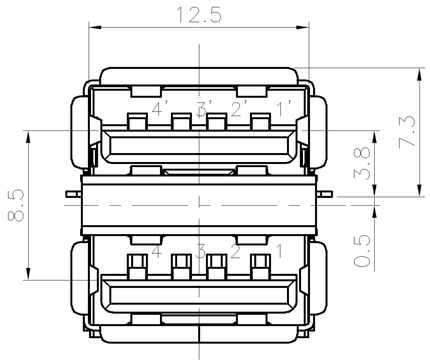

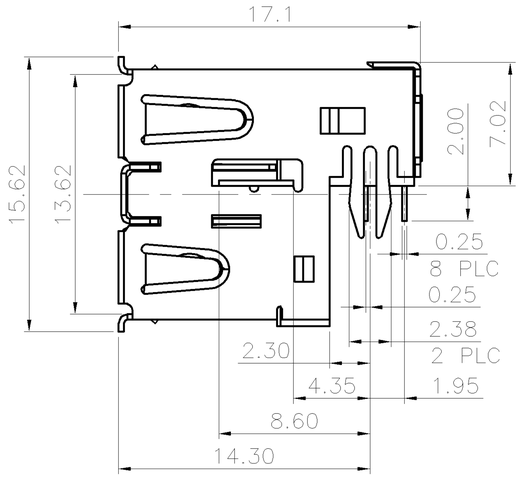

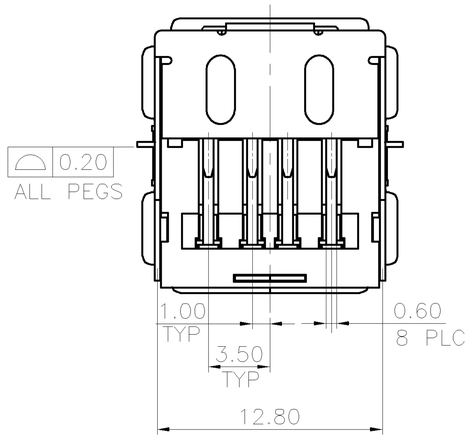

TAPE & REEL	7-1734062-1
PACKAGE	PART NUMBER

THIS DRAWING IS A CONTROLLED DOCUMENT.

DIMENSIONS: MM

TOLERANCES UNLESS OTHERWISE SPECIFIED:

0 PLC	± -
1 PLC	± 0.35
2 PLC	± 0.25
3 PLC	± -
4 PLC	± -
ANGLES	± 3°

MATERIAL: SEE NOTE

FINISH: SEE NOTE

DWN
CHK
APVD
PRODUCT SPEC
QUALIFICATION TEST REPORT
WEIGHT 4.3 GRAMS

TE Connectivity

NAME: USB CONNECTOR, A SERIES, STACKED, OFFSET TYPE

SIZE	CAGE CODE	DRAWING NO	RESTRICTED TO
A3	00779	C-1734062	—

CUSTOMER DRAWING | SCALE — | SHEET 10 OF 24 | REV G

THIS DRAWING IS UNPUBLISHED. RELEASED FOR PUBLICATION -,- .
© COPYRIGHT - BY TYCO ELECTRONICS CORPORATION. ALL RIGHTS RESERVED.

LOC	DIST
DW	—

REVISIONS

P	LTR	DESCRIPTION	DATE	DWN	APVD
		SEE SHEET 1.			

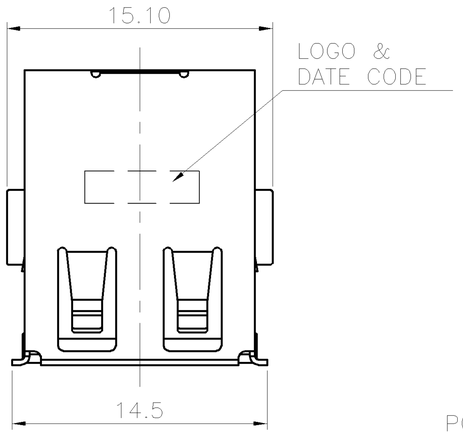

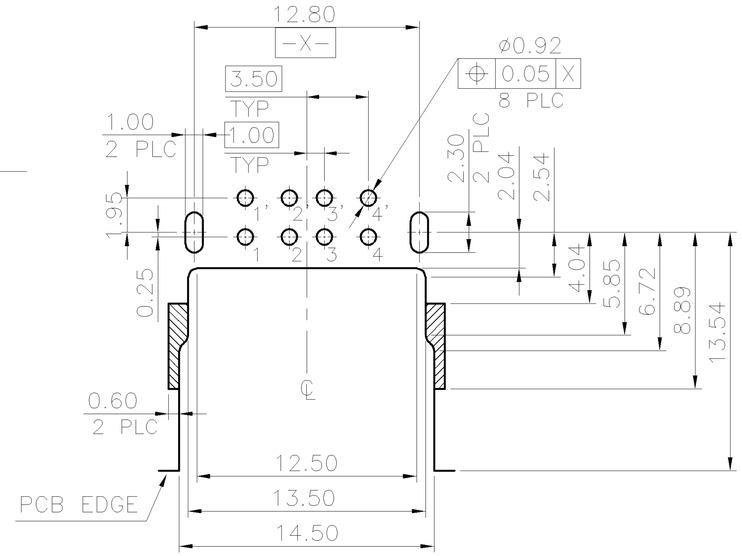

RECOMMEND P.C.B LAYOUT (THICKNESS 1.2mm)
(COMPONENT SIDE) TOLERANCE±0.05mm

NOTE:
1. MATERIAL:
   HOUSING: PA9T WITH 30% GF, UL 94V-0 RATED, BLACK COLOR.
   SPACER: PA9T WITH 30% GF, UL 94V-0 RATED, BLACK COLOR.
   CONTACT: PHOSPHOR BRONZE.
   FRONT SHIELD: BRASS.
   GROUNDING STRIP: BRASS.
2. FINISH:
   CONTACT: 0.762μm [30μ"] MIN. GOLD PLATING ON CONTACT AREA.
   3.048μm [120μ"] MIN. BRIGHT TIN PLATING ON SOLDER TAIL, WITH ENTIREC CONTACT UNDERPLATED 1.27μm [50μ"] MIN. NICKEL.
   FRONT SHELL: 0.762μm [30μ"] MIN. NICKEL PLATED.
   0.762μm [30μ"] MIN. Cu UNDERPLATING OVERALL.
   GROUNDING STRIP: 0.762μm [30μ"] MIN. NICKEL PLATING.
   0.762μm [30μ"] MIN. Cu UNDER PLATING OVERALL.
3. REFLOW SOLDER CAPABLE TO 260°C PER TE SPEC 109-201, CONDITION B.

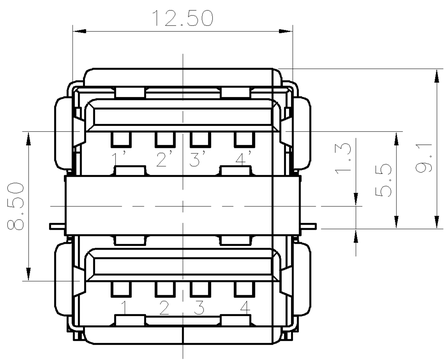

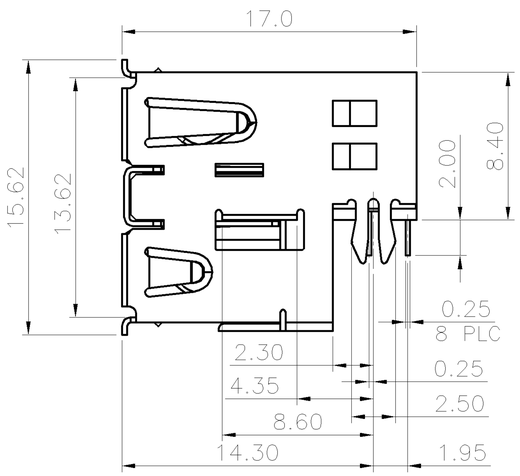

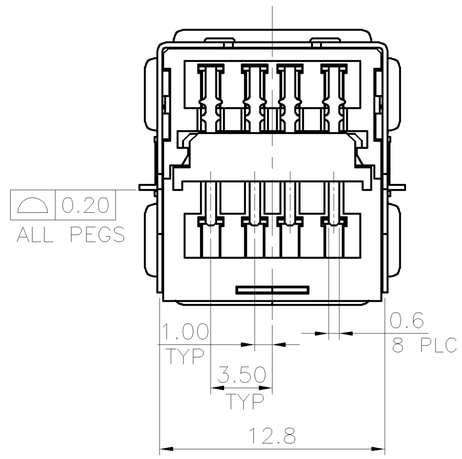

TAPE & REEL	8-1734062-1
PACKAGE	PART NUMBER

THIS DRAWING IS A CONTROLLED DOCUMENT.

DIMENSIONS: MM

TOLERANCES UNLESS OTHERWISE SPECIFIED:

0 PLC	± -
1 PLC	± 0.35
2 PLC	± 0.25
3 PLC	± -
4 PLC	± -
ANGLES	± 3°

MATERIAL: SEE NOTE

FINISH: SEE NOTE

DWN / CHK / APVD

PRODUCT SPEC

QUALIFICATION TEST REPORT

WEIGHT: 4.3 GRAMS

CUSTOMER DRAWING

TE Connectivity

NAME: USB CONNECTOR, A SERIES, STACKED, OFFSET TYPE

SIZE	CAGE CODE	DRAWING NO	RESTRICTED TO
A3	00779	C-1734062	—

SCALE	SHEET	REV
—	11 OF 24	G

THIS DRAWING IS UNPUBLISHED. RELEASED FOR PUBLICATION -,- .
© COPYRIGHT - BY TYCO ELECTRONICS CORPORATION. ALL RIGHTS RESERVED.

LOC	DIST
DW	—

REVISIONS

P	LTR	DESCRIPTION	DATE	DWN	APVD
		SEE SHEET 1.			

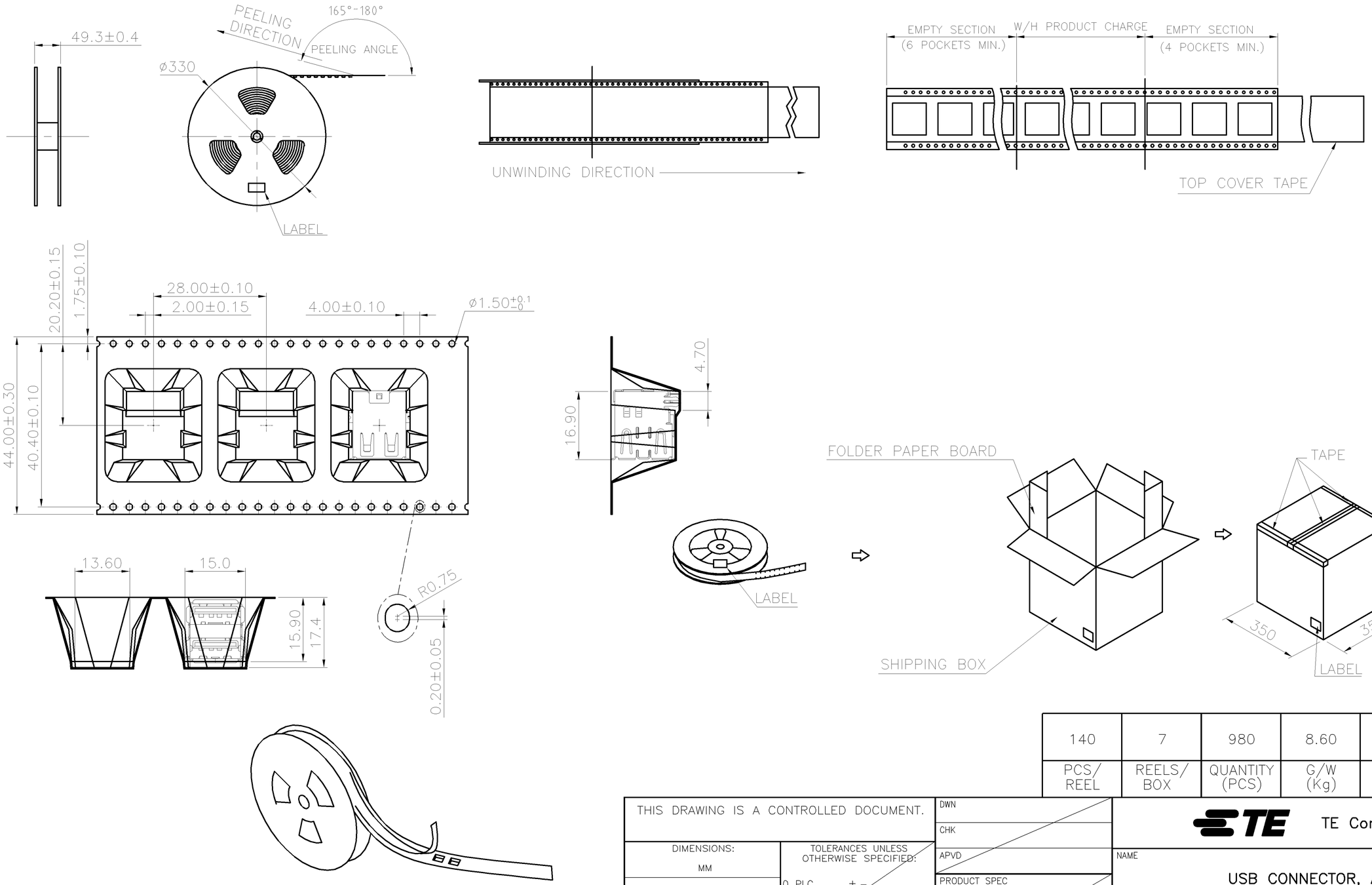

PCS/ REEL	REELS/ BOX	QUANTITY (PCS)	G/W (Kg)	N/W (Kg)	PART NUMBER
140	7	980	8.60	4.62	1-1734062-1
					1734062-1

THIS DRAWING IS A CONTROLLED DOCUMENT.

DIMENSIONS: MM

TOLERANCES UNLESS OTHERWISE SPECIFIED:
0 PLC ± -
1 PLC ± -
2 PLC ± -
3 PLC ± -
4 PLC ± -
ANGLES ± -

MATERIAL -

FINISH -

DWN
CHK
APVD
PRODUCT SPEC —
APPLICATION SPEC —
WEIGHT —

TE Connectivity

NAME
USB CONNECTOR, A SERIES, STACKED, OFFSET TYPE

SIZE	CAGE CODE	DRAWING NO	RESTRICTED TO
A3	00779	C-1734062	—

CUSTOMER DRAWING | SCALE — | SHEET 12 OF 24 | REV G

THIS DRAWING IS UNPUBLISHED. RELEASED FOR PUBLICATION – ,– .
© COPYRIGHT – BY TYCO ELECTRONICS CORPORATION. ALL RIGHTS RESERVED.

LOC	DIST
DW	—

REVISIONS

P	LTR	DESCRIPTION	DATE	DWN	APVD
		SEE SHEET 1.			

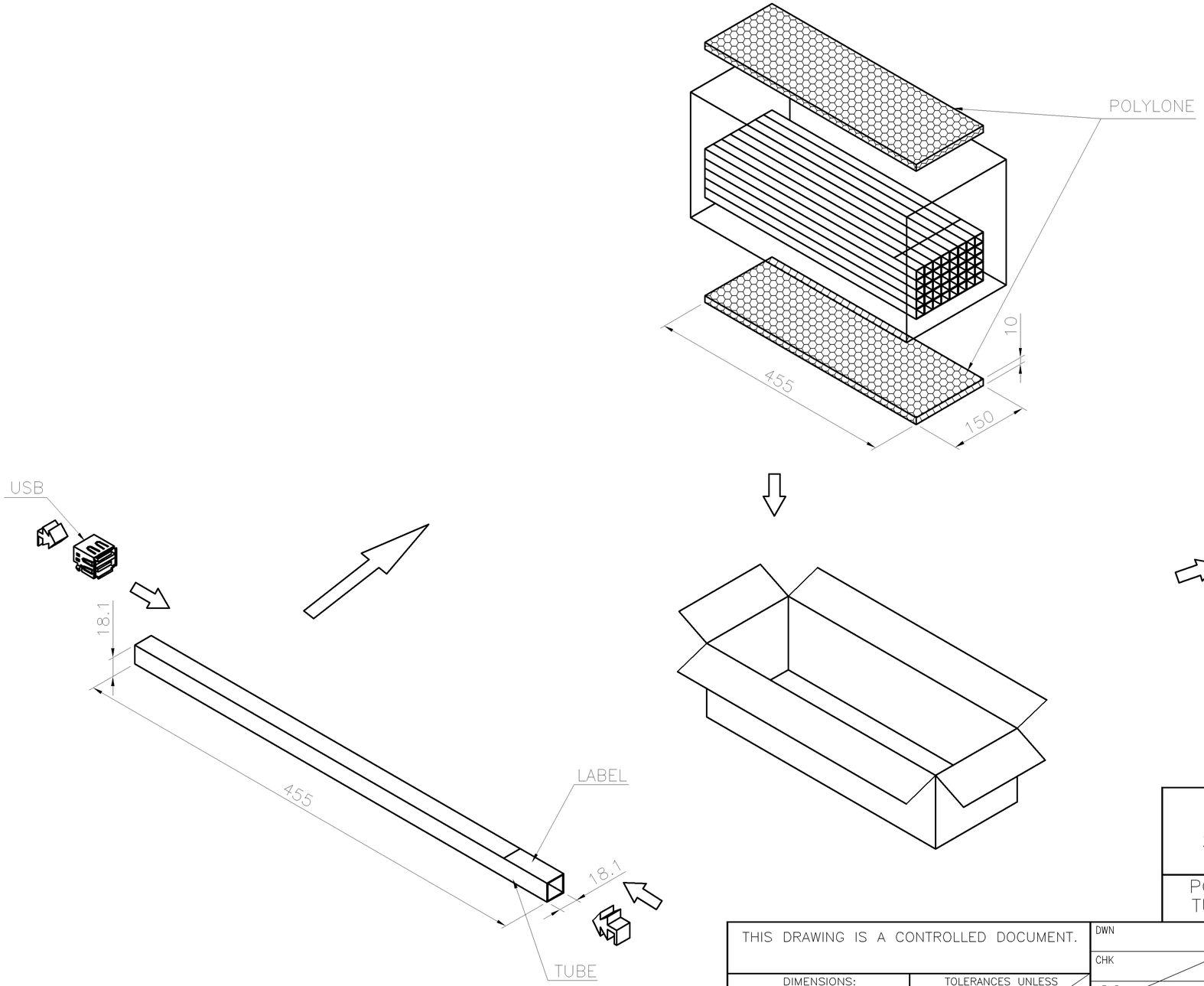

PCS/ TUBE	TUBS INNER BOX	QUANTITY (PCS)	G/W (Kg)	N/W (Kg)	PART NUMBER
24	40	960	6.10	4.52	3–1734062–2 1–1734062–2 1734062–2

THIS DRAWING IS A CONTROLLED DOCUMENT.

DIMENSIONS: MM

TOLERANCES UNLESS OTHERWISE SPECIFIED:
0 PLC ± –
1 PLC ± –
2 PLC ± –
3 PLC ± –
4 PLC ± –
ANGLES ± –

MATERIAL –

FINISH –

DWN
CHK
APVD
PRODUCT SPEC —
APPLICATION SPEC —
WEIGHT —

TE Connectivity

NAME
USB CONNECTOR, A SERIES, STACKED, OFFSET TYPE

SIZE	CAGE CODE	DRAWING NO	RESTRICTED TO
A3	00779	C–1734062	—

CUSTOMER DRAWING | SCALE — | SHEET 13 OF 24 | REV G

THIS DRAWING IS UNPUBLISHED. RELEASED FOR PUBLICATION -,- .
© COPYRIGHT - BY TYCO ELECTRONICS CORPORATION. ALL RIGHTS RESERVED.

LOC	DIST
DW	—

REVISIONS

P	LTR	DESCRIPTION	DATE	DWN	APVD
		SEE SHEET 1.			

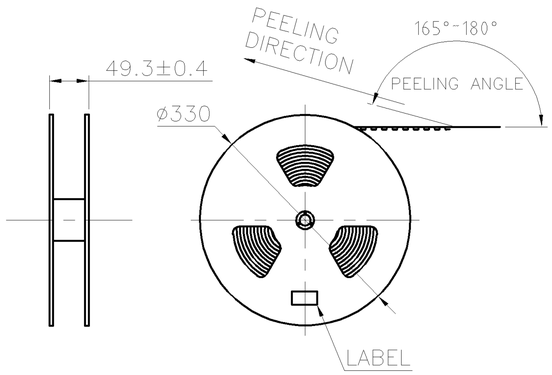

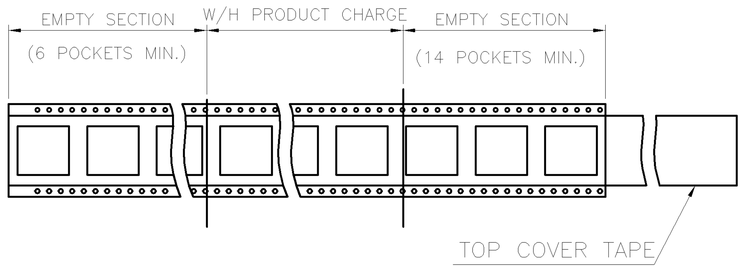

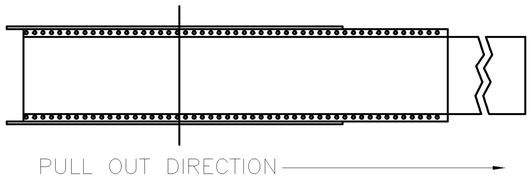

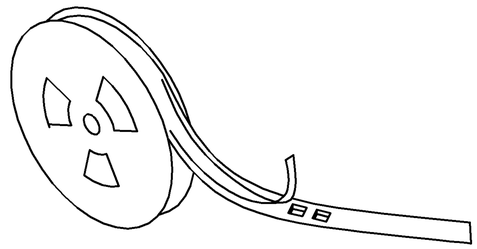

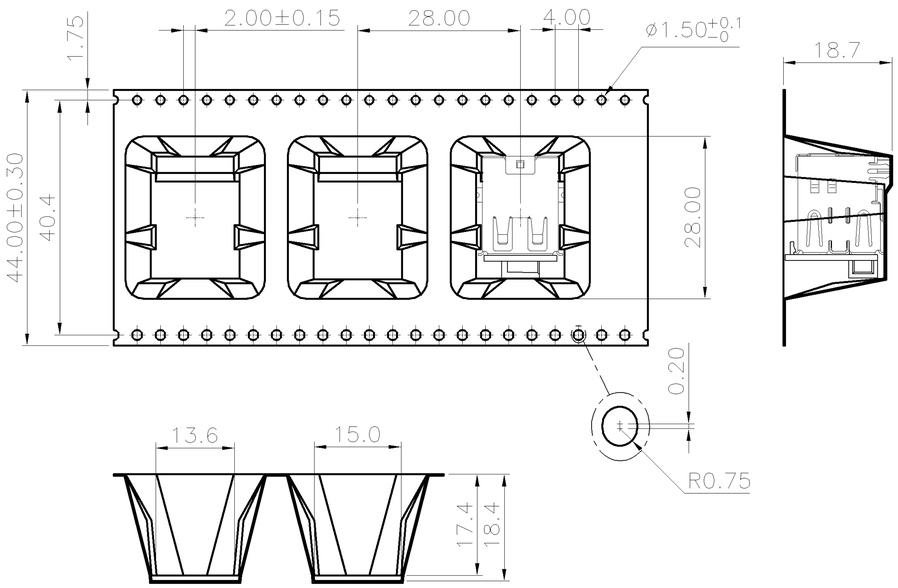

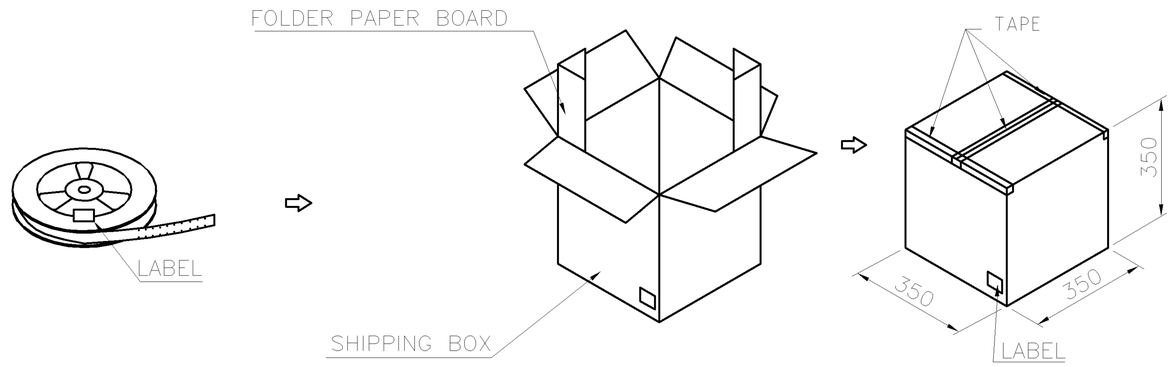

100	7	700	7.28	3.30	1734062-3
PCS/ REEL	REELS/ BOX	QUANTITY (PCS)	G/W (Kg)	N/W (Kg)	PART NUMBER

THIS DRAWING IS A CONTROLLED DOCUMENT.

DIMENSIONS: MM

TOLERANCES UNLESS OTHERWISE SPECIFIED:
0 PLC ± –
1 PLC ± –
2 PLC ± –
3 PLC ± –
4 PLC ± –
ANGLES ± –

MATERIAL –

FINISH –

DWN
CHK
APVD
PRODUCT SPEC —
APPLICATION SPEC —
WEIGHT —

TE Connectivity

NAME
USB CONNECTOR, A SERIES, STACKED, OFFSET TYPE

SIZE	CAGE CODE	DRAWING NO	RESTRICTED TO
A3	00779	C-1734062	—

CUSTOMER DRAWING | SCALE — | SHEET 14 OF 24 | REV G

THIS DRAWING IS UNPUBLISHED. RELEASED FOR PUBLICATION – ,– .
© COPYRIGHT – BY TYCO ELECTRONICS CORPORATION. ALL RIGHTS RESERVED.

LOC	DIST
DW	—

REVISIONS

P	LTR	DESCRIPTION	DATE	DWN	APVD
		SEE SHEET 1.			

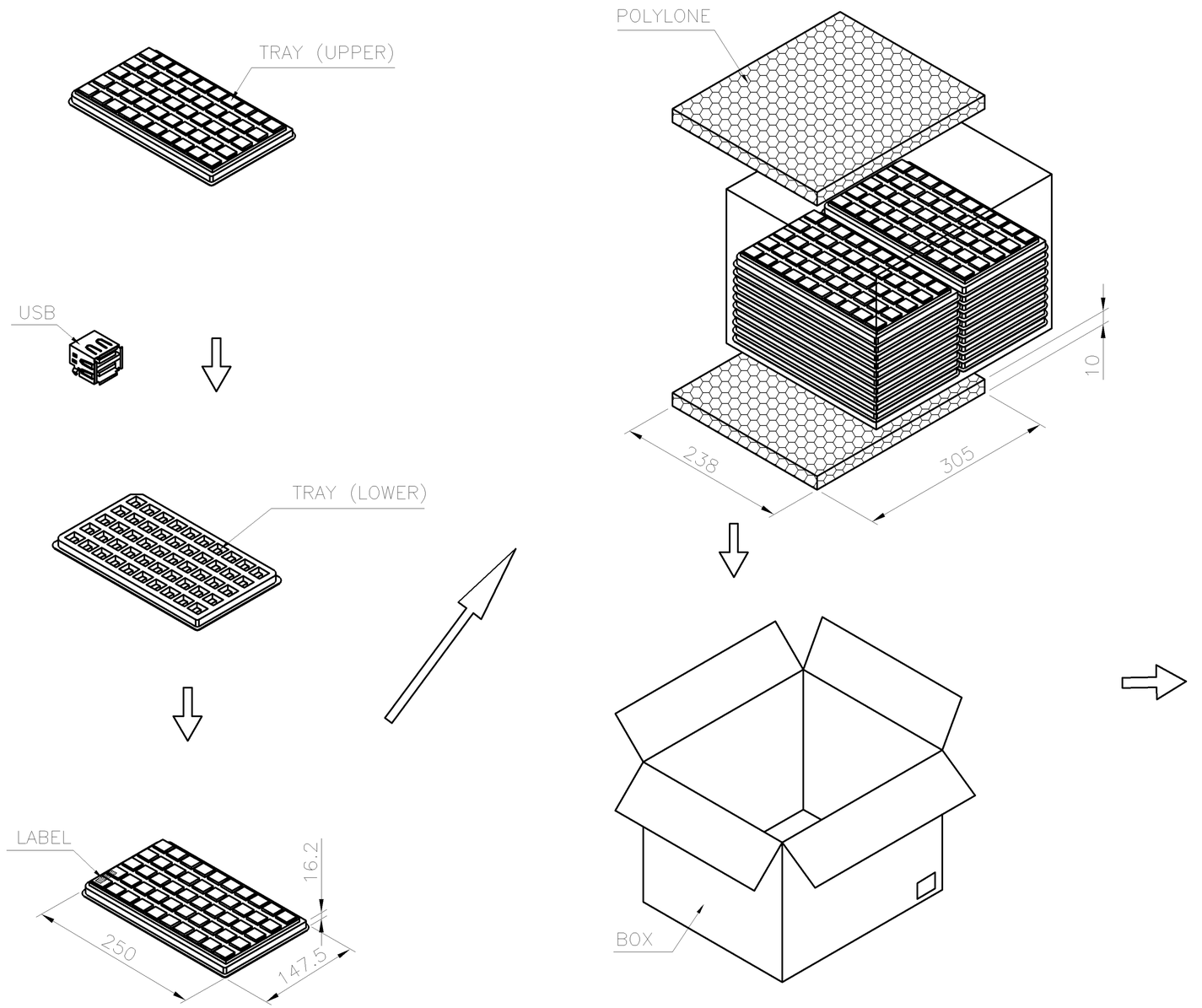

50	20	1000	6.82	4.71	2–1734062–2
PCS/ TRAY	TRAY/ BOX	QUANTITY (PCS)	G/W (Kg)	N/W (Kg)	PART NUMBER

THIS DRAWING IS A CONTROLLED DOCUMENT.

DIMENSIONS: MM

TOLERANCES UNLESS OTHERWISE SPECIFIED:
0 PLC ± –
1 PLC ± –
2 PLC ± –
3 PLC ± –
4 PLC ± –
ANGLES ± –

MATERIAL –

FINISH –

DWN
CHK
APVD
PRODUCT SPEC —
APPLICATION SPEC —
WEIGHT —

TE Connectivity

NAME
USB CONNECTOR, A SERIES, STACKED, OFFSET TYPE

SIZE	CAGE CODE	DRAWING NO	RESTRICTED TO
A3	00779	C–1734062	—

CUSTOMER DRAWING | SCALE — | SHEET 15 OF 24 | REV G

THIS DRAWING IS UNPUBLISHED. RELEASED FOR PUBLICATION – ,– .
© COPYRIGHT – BY TYCO ELECTRONICS CORPORATION. ALL RIGHTS RESERVED.

LOC	DIST
DW	—

REVISIONS

P	LTR	DESCRIPTION	DATE	DWN	APVD
		SEE SHEET 1.			

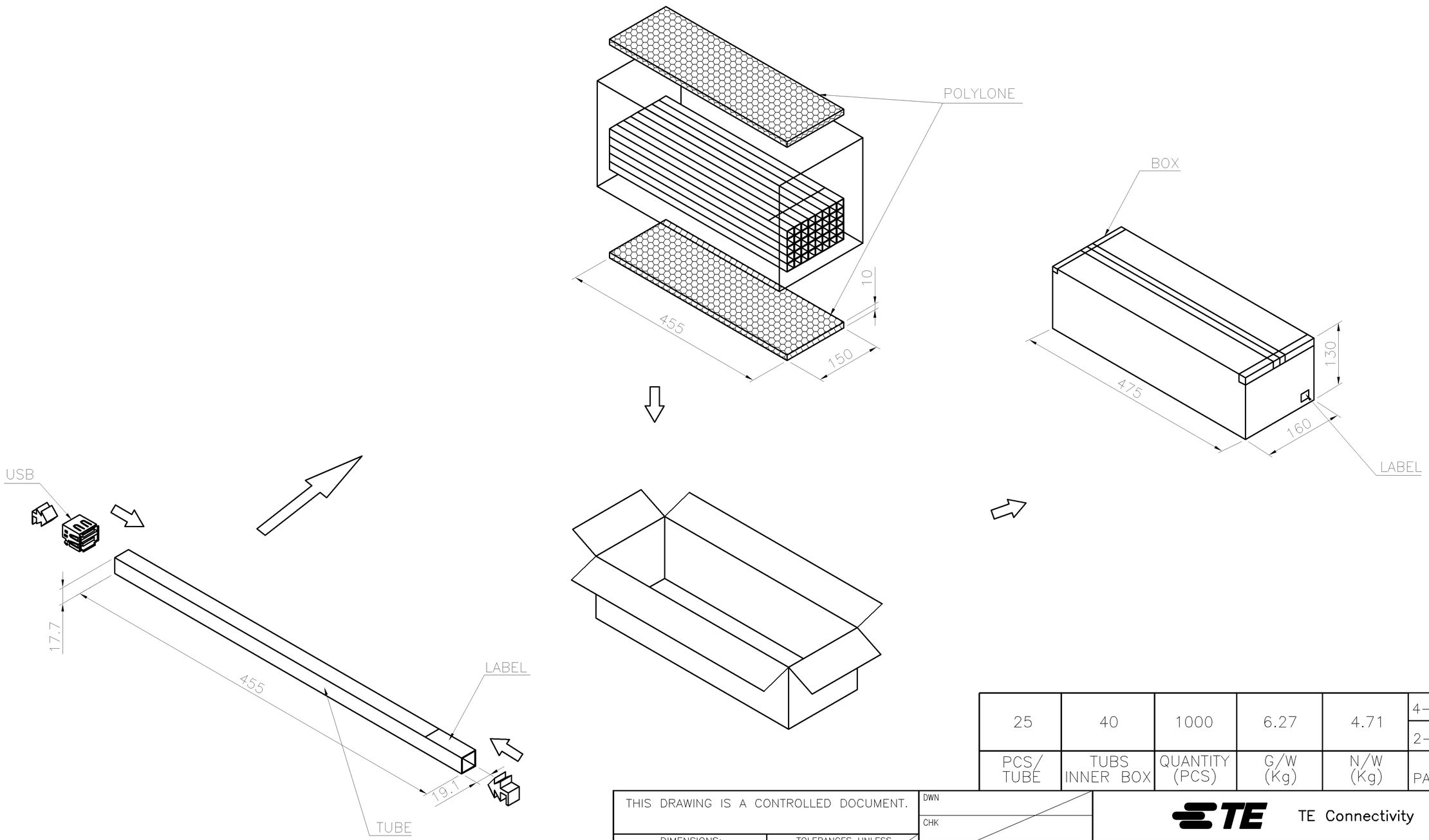

PCS/ TUBE	TUBS INNER BOX	QUANTITY (PCS)	G/W (Kg)	N/W (Kg)	PART NUMBER
25	40	1000	6.27	4.71	4–1734062–1 2–1734062–1

THIS DRAWING IS A CONTROLLED DOCUMENT.

DIMENSIONS: MM

TOLERANCES UNLESS OTHERWISE SPECIFIED:
0 PLC ± –
1 PLC ± –
2 PLC ± –
3 PLC ± –
4 PLC ± –
ANGLES ± –

MATERIAL –

FINISH –

DWN
CHK
APVD
PRODUCT SPEC —
APPLICATION SPEC —
WEIGHT —

TE Connectivity

NAME
USB CONNECTOR, A SERIES, STACKED, OFFSET TYPE

SIZE	CAGE CODE	DRAWING NO	RESTRICTED TO
A3	00779	C–1734062	—

CUSTOMER DRAWING | SCALE — | SHEET 16 OF 24 | REV G

THIS DRAWING IS UNPUBLISHED. RELEASED FOR PUBLICATION – –, .
© COPYRIGHT – BY TYCO ELECTRONICS CORPORATION. ALL RIGHTS RESERVED.

LOC	DIST
DW	—

REVISIONS

P	LTR	DESCRIPTION	DATE	DWN	APVD
		SEE SHEET 1.			

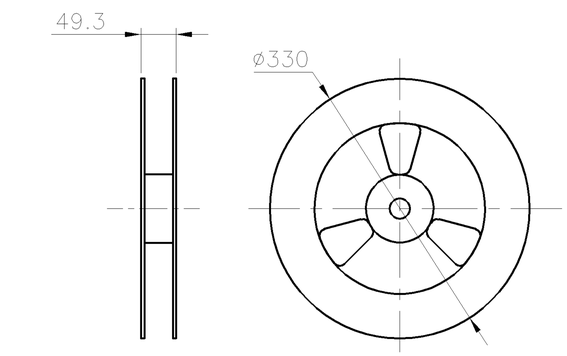

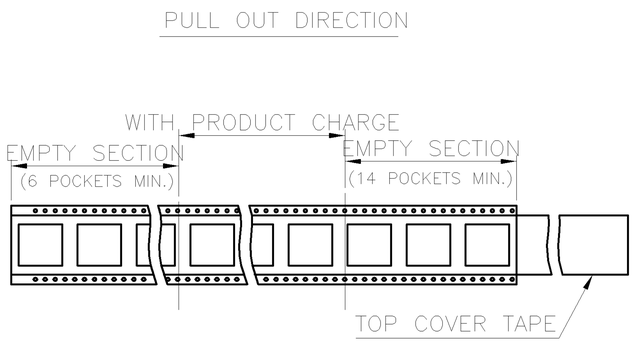

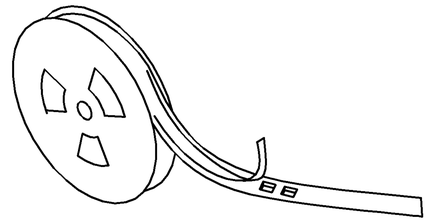

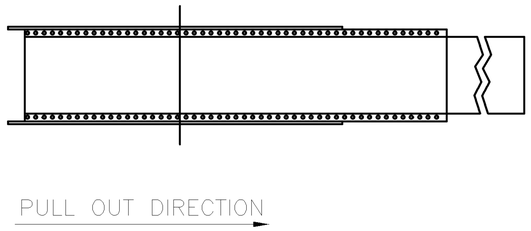

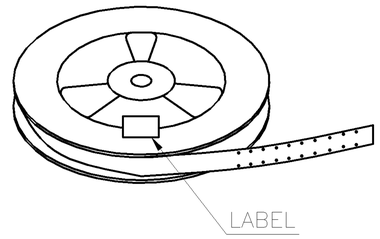

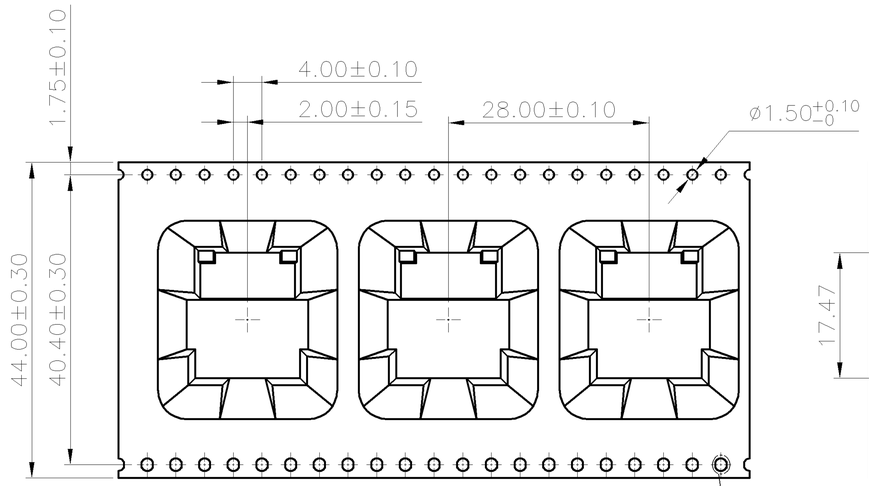

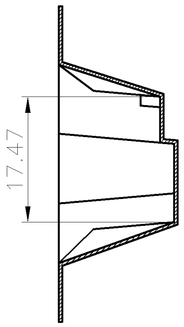

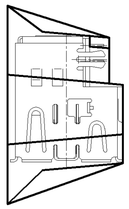

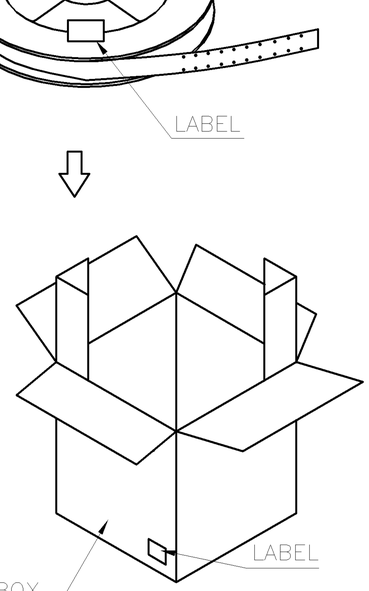

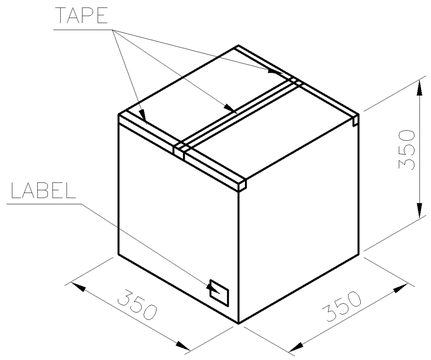

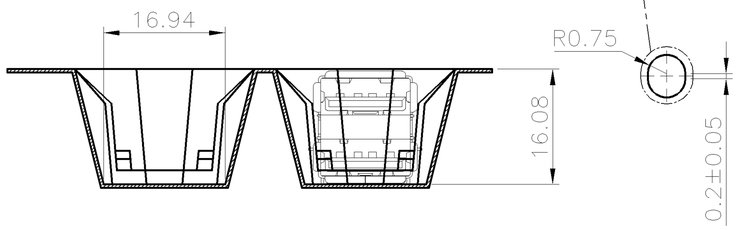

PCS/ REEL	REELS/ BOX	QUANTITY (PCS)	G/W (Kg)	N/W (Kg)	PART NUMBER
120	7	840	9.05	3.96	3–1734062–4
					3–1734062–3

THIS DRAWING IS A CONTROLLED DOCUMENT.

DIMENSIONS: MM

TOLERANCES UNLESS OTHERWISE SPECIFIED:
0 PLC ± –
1 PLC ± –
2 PLC ± –
3 PLC ± –
4 PLC ± –
ANGLES ± –

MATERIAL –

FINISH –

DWN
CHK
APVD
PRODUCT SPEC —
APPLICATION SPEC —
WEIGHT —

TE Connectivity

NAME
USB CONNECTOR, A SERIES, STACKED, OFFSET TYPE

SIZE	CAGE CODE	DRAWING NO	RESTRICTED TO
A3	00779	C–1734062	—

CUSTOMER DRAWING | SCALE — | SHEET 17 OF 24 | REV G

THIS DRAWING IS UNPUBLISHED. RELEASED FOR PUBLICATION – ,– .
© COPYRIGHT – BY TYCO ELECTRONICS CORPORATION. ALL RIGHTS RESERVED.

LOC	DIST
DW	—

REVISIONS

P	LTR	DESCRIPTION	DATE	DWN	APVD
		SEE SHEET 1.			

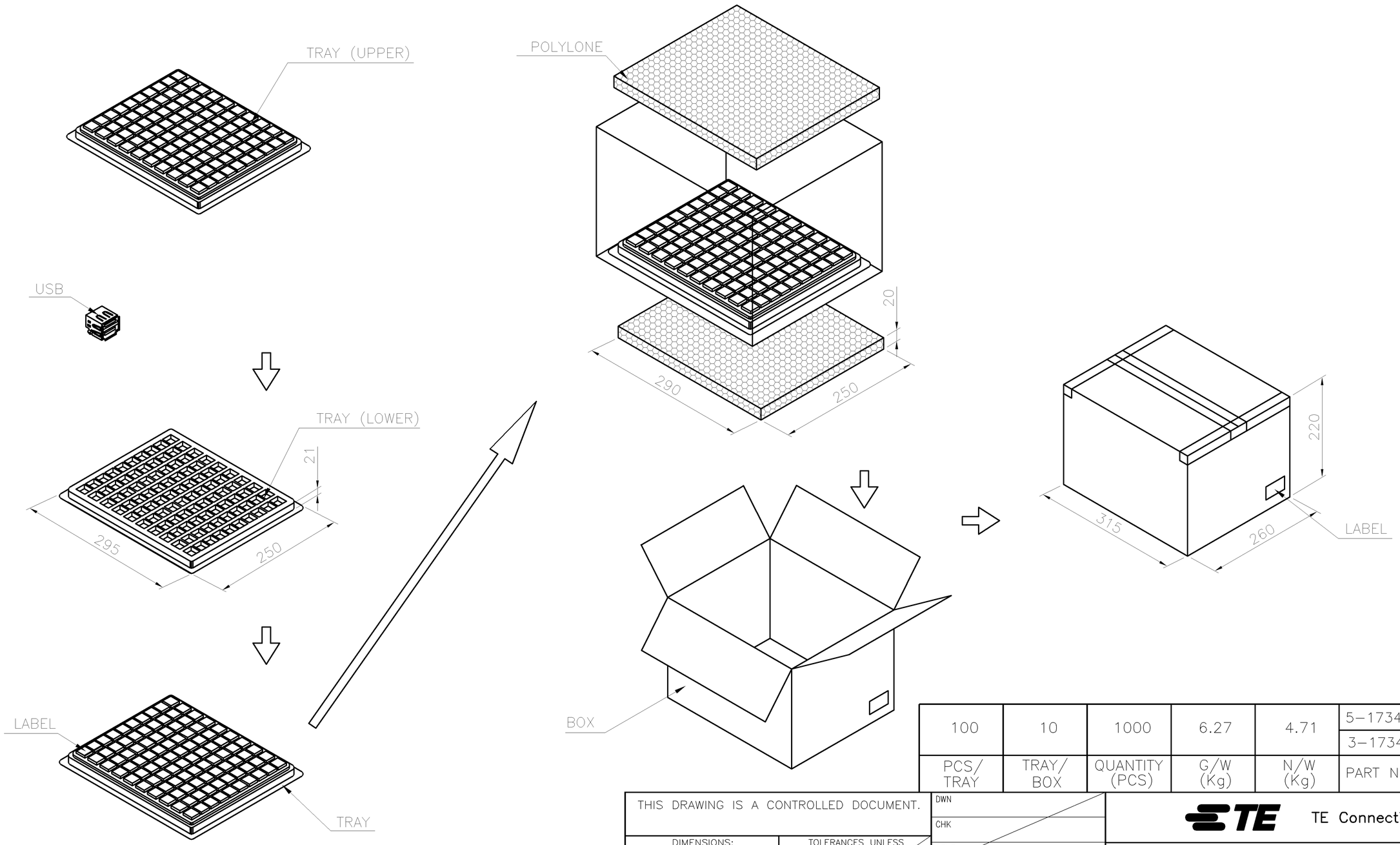

PCS/ TRAY	TRAY/ BOX	QUANTITY (PCS)	G/W (Kg)	N/W (Kg)	PART NUMBER	
100	10	1000	6.27	4.71	5–1734062–2	OBSOLETE
					3–1734062–1	

THIS DRAWING IS A CONTROLLED DOCUMENT.

DIMENSIONS: MM

TOLERANCES UNLESS OTHERWISE SPECIFIED:

0 PLC	± –
1 PLC	± –
2 PLC	± –
3 PLC	± –
4 PLC	± –
ANGLES	± –

MATERIAL –

FINISH –

DWN

CHK

APVD

PRODUCT SPEC —

APPLICATION SPEC —

WEIGHT —

TE Connectivity

NAME

USB CONNECTOR, A SERIES, STACKED, OFFSET TYPE

SIZE	CAGE CODE	DRAWING NO	RESTRICTED TO
A3	00779	C–1734062	—

CUSTOMER DRAWING | SCALE — | SHEET 18 OF 24 | REV G

THIS DRAWING IS UNPUBLISHED. RELEASED FOR PUBLICATION -,- .
© COPYRIGHT - BY TYCO ELECTRONICS CORPORATION. ALL RIGHTS RESERVED.

LOC	DIST
DW	—

REVISIONS

P	LTR	DESCRIPTION	DATE	DWN	APVD
		SEE SHEET 1.			

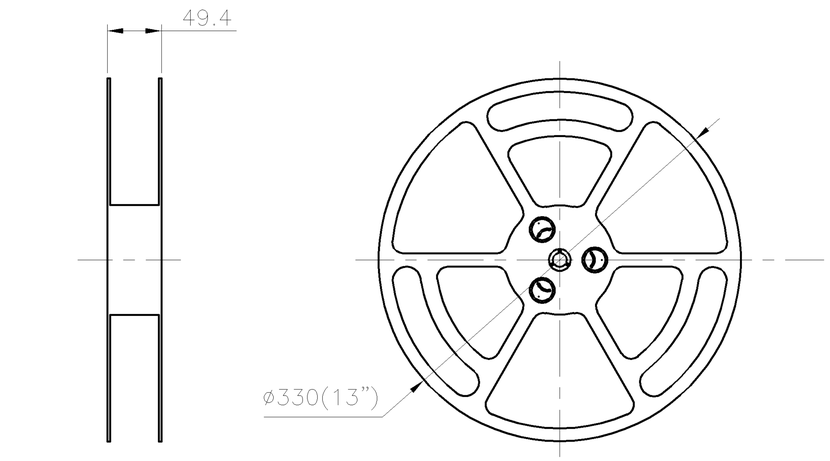

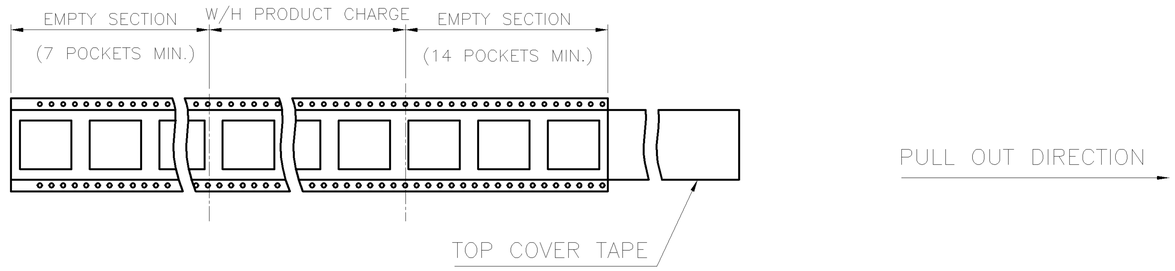

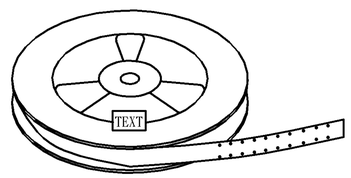

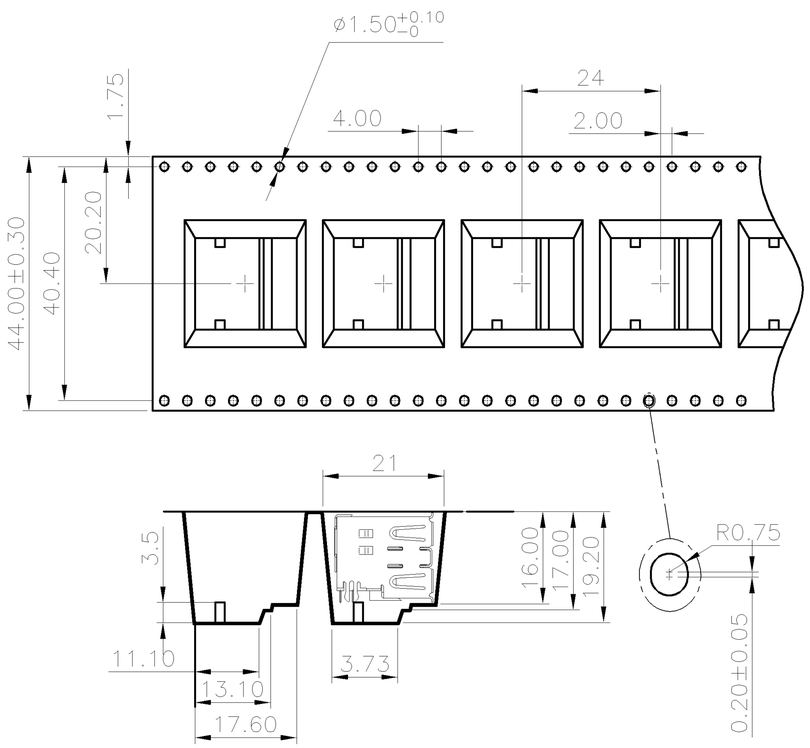

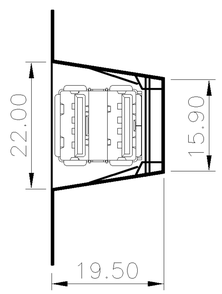

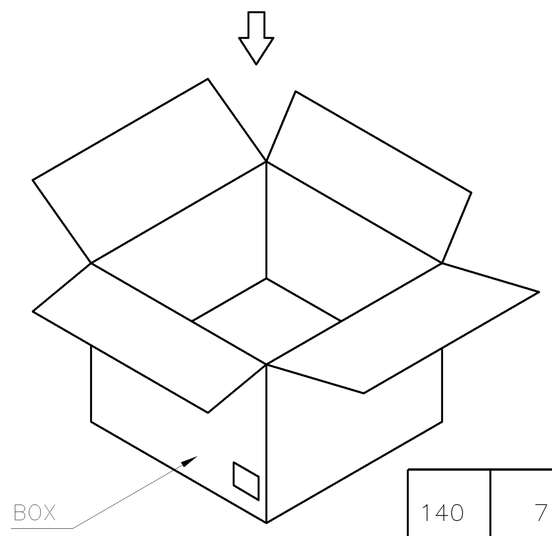

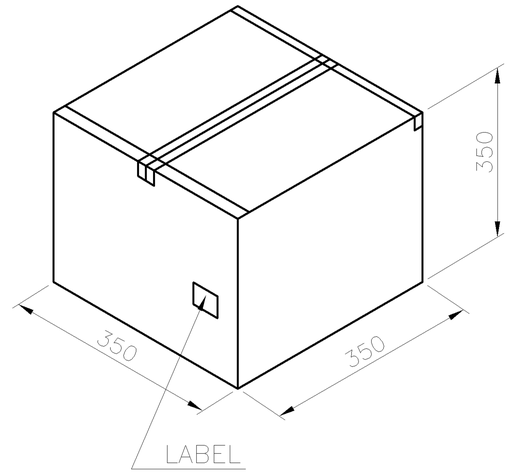

PCS/ REEL	REELS/ BOX	QUANTITY (PCS)	G/W (Kg)	N/W (Kg)	PART NUMBER	
140	7	980	8.60	4.62	5-1734062-1	OBSOLETE

THIS DRAWING IS A CONTROLLED DOCUMENT.

DIMENSIONS: MM

TOLERANCES UNLESS OTHERWISE SPECIFIED:
0 PLC ± -
1 PLC ± -
2 PLC ± -
3 PLC ± -
4 PLC ± -
ANGLES ± -

MATERIAL -

FINISH -

DWN
CHK
APVD
PRODUCT SPEC —
APPLICATION SPEC —
WEIGHT —

TE Connectivity

NAME
USB CONNECTOR, A SERIES, STACKED, OFFSET TYPE

SIZE	CAGE CODE	DRAWING NO	RESTRICTED TO
A3	00779	C-1734062	—

CUSTOMER DRAWING | SCALE — | SHEET 19 OF 24 | REV G

THIS DRAWING IS UNPUBLISHED. RELEASED FOR PUBLICATION -,- .
© COPYRIGHT - BY TYCO ELECTRONICS CORPORATION. ALL RIGHTS RESERVED.

LOC	DIST
DW	—

REVISIONS

P	LTR	DESCRIPTION	DATE	DWN	APVD
		SEE SHEET 1.			

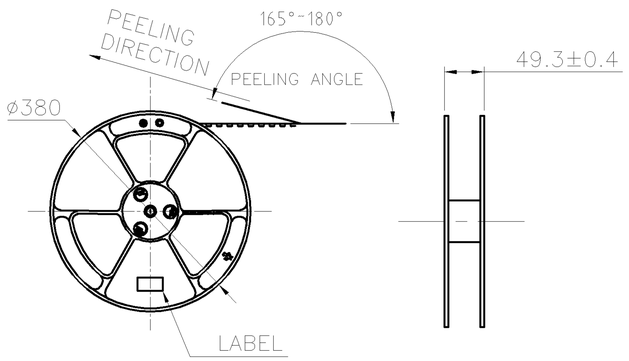

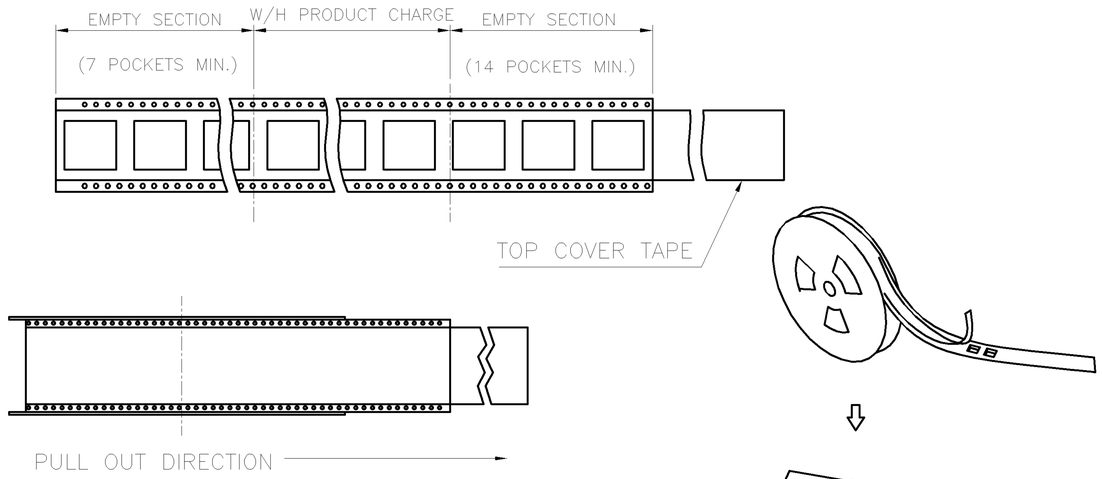

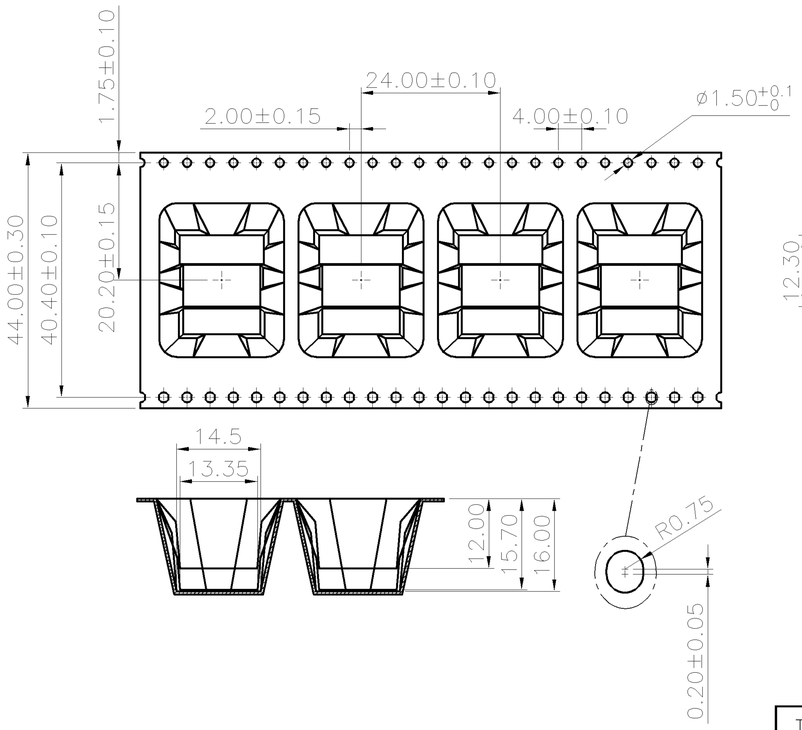

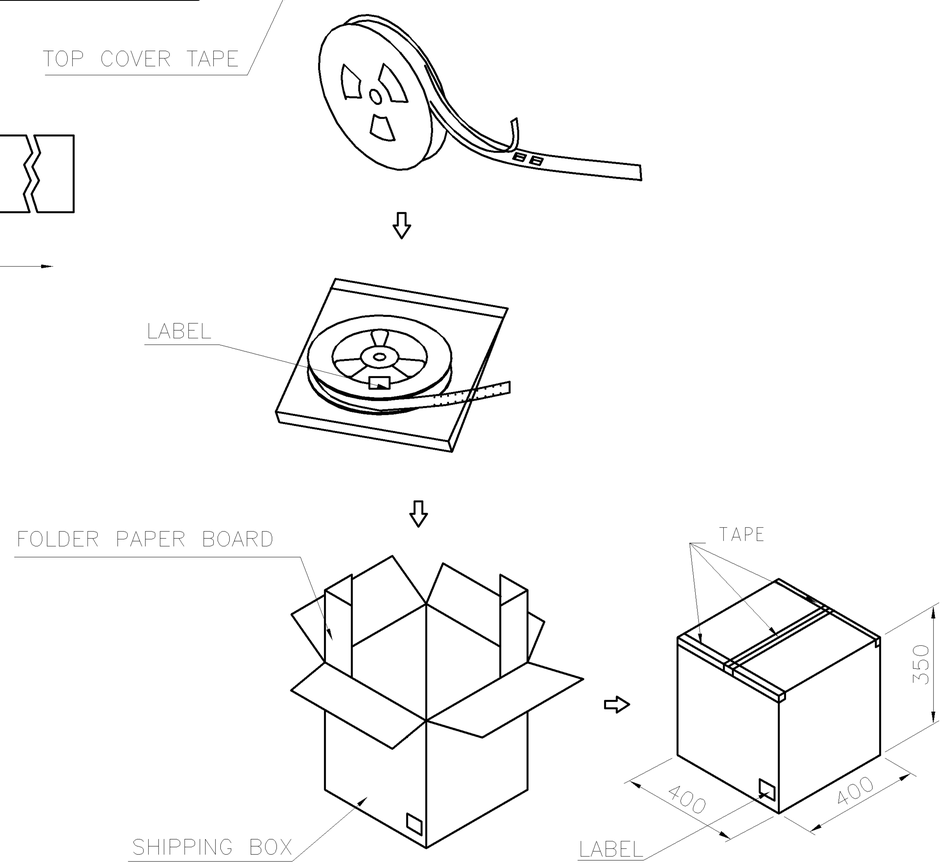

11.20 Kg	6.10 Kg	200	7	1400 PCS	4-1734062-2
GROSS WEIGHT	NET WEIGHT	PCS/REEL	REELS /CARTON	QUANTITY	PART NUMBER

THIS DRAWING IS A CONTROLLED DOCUMENT.

DIMENSIONS: MM

TOLERANCES UNLESS OTHERWISE SPECIFIED:
0 PLC ± –
1 PLC ± –
2 PLC ± –
3 PLC ± –
4 PLC ± –
ANGLES ± –

MATERIAL –

FINISH –

DWN
CHK
APVD
PRODUCT SPEC —
APPLICATION SPEC —
WEIGHT —

TE Connectivity

NAME
USB CONNECTOR, A SERIES, STACKED, OFFSET TYPE

SIZE	CAGE CODE	DRAWING NO	RESTRICTED TO
A3	00779	C-1734062	—

CUSTOMER DRAWING | SCALE — | SHEET 20 OF 24 | REV G

THIS DRAWING IS UNPUBLISHED. RELEASED FOR PUBLICATION -,- .
© COPYRIGHT - BY TYCO ELECTRONICS CORPORATION. ALL RIGHTS RESERVED.

LOC	DIST
DW	—

REVISIONS

P	LTR	DESCRIPTION	DATE	DWN	APVD
		SEE SHEET 1.			

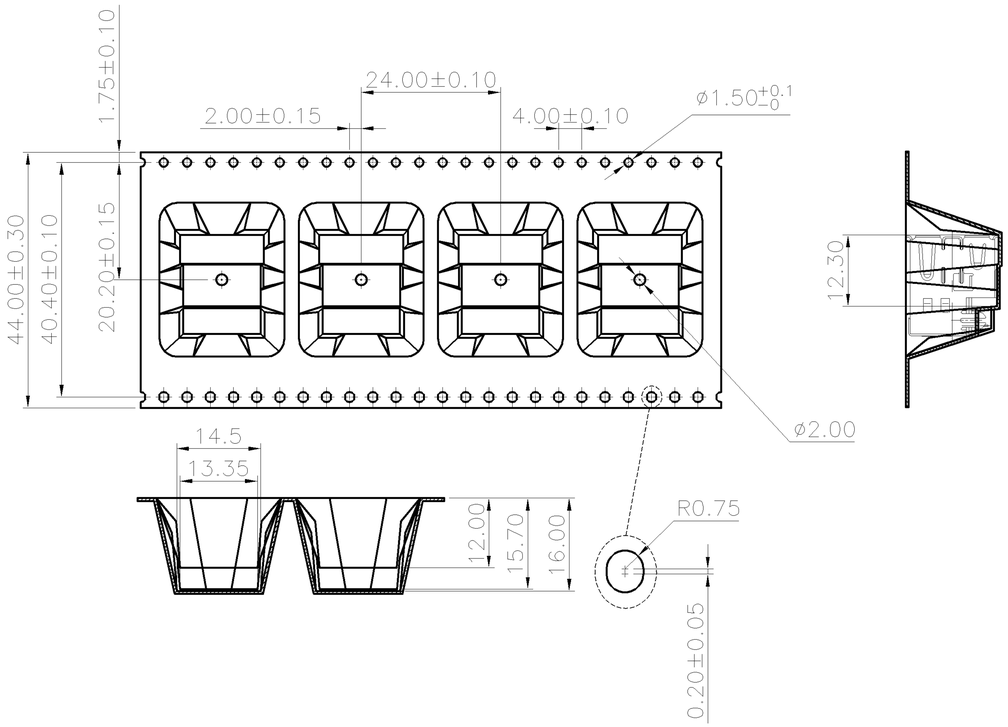

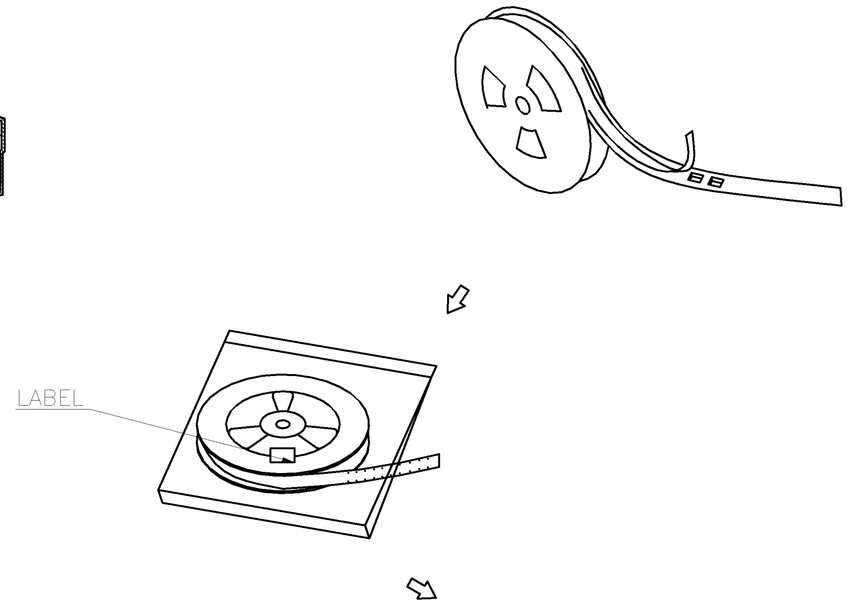

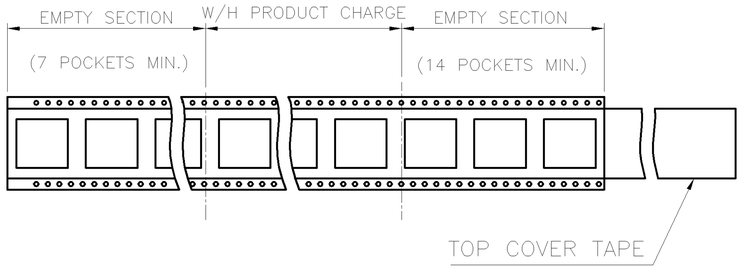

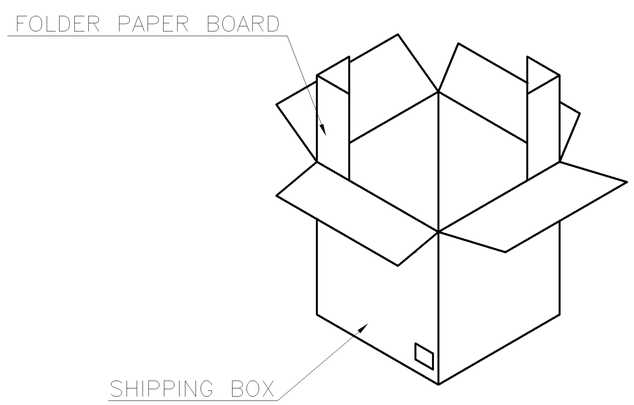

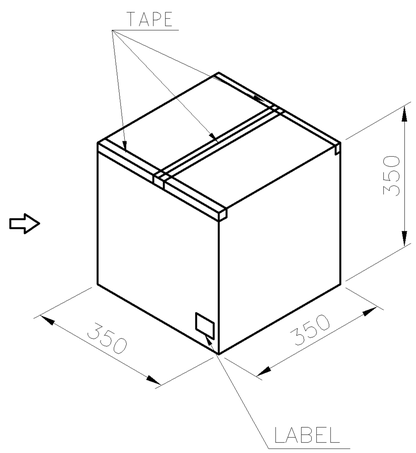

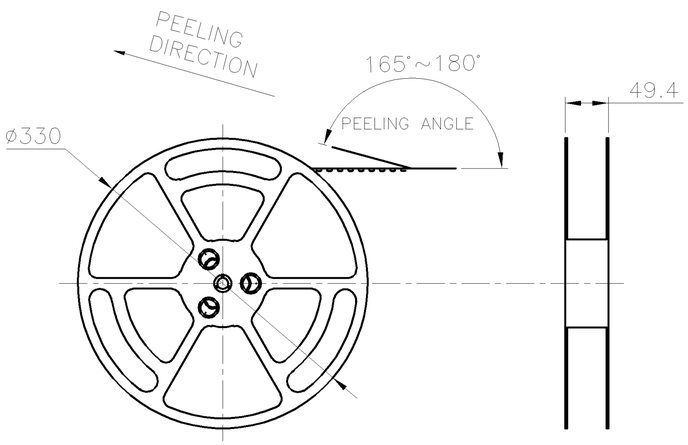

GROSS WEIGHT	NET WEIGHT	PCS/REEL	REELS /CARTON	QUANTITY	PART NUMBER
7.01 Kg	2.98 Kg	100	7	700 PCS	4-1734062-3

THIS DRAWING IS A CONTROLLED DOCUMENT.

DIMENSIONS: MM

TOLERANCES UNLESS OTHERWISE SPECIFIED:
0 PLC ± –
1 PLC ± –
2 PLC ± –
3 PLC ± –
4 PLC ± –
ANGLES ± –

MATERIAL –

FINISH –

DWN
CHK
APVD
PRODUCT SPEC —
APPLICATION SPEC —
WEIGHT —

TE Connectivity

NAME
USB CONNECTOR, A SERIES, STACKED, OFFSET TYPE

SIZE	CAGE CODE	DRAWING NO	RESTRICTED TO
A3	00779	C-1734062	—

CUSTOMER DRAWING | SCALE — | SHEET 21 OF 24 | REV G

THIS DRAWING IS UNPUBLISHED. RELEASED FOR PUBLICATION -,- .
© COPYRIGHT - BY TYCO ELECTRONICS CORPORATION. ALL RIGHTS RESERVED.

LOC	DIST
DW	—

REVISIONS

P	LTR	DESCRIPTION	DATE	DWN	APVD
		SEE SHEET 1.			

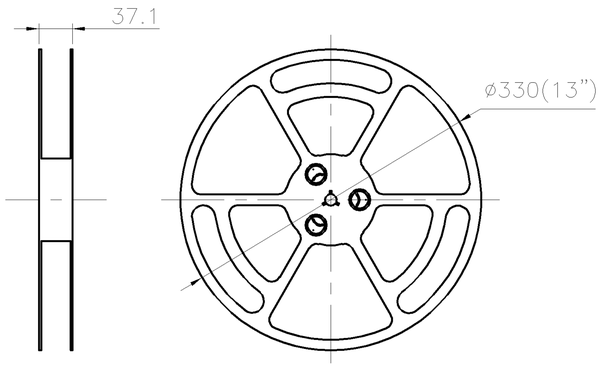

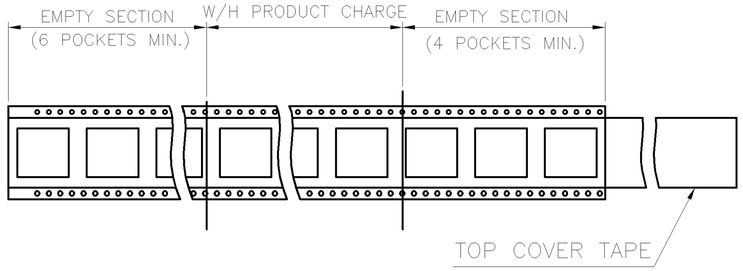

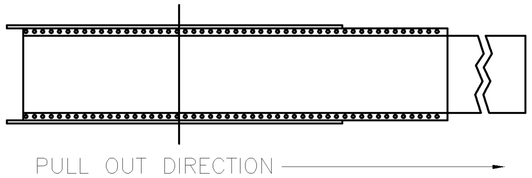

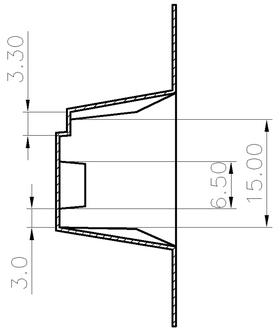

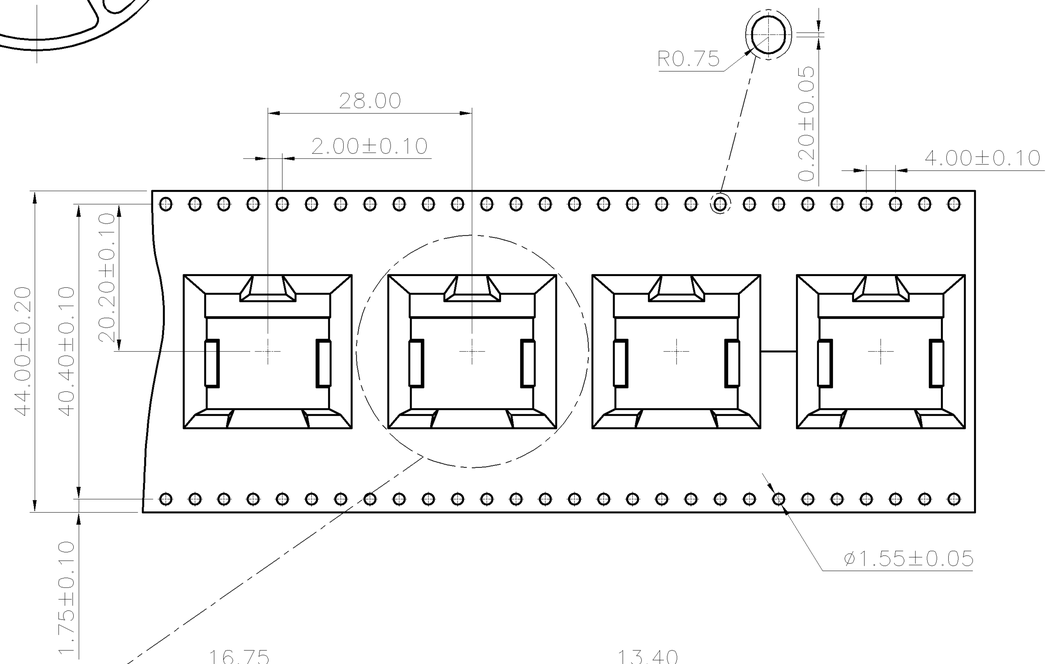

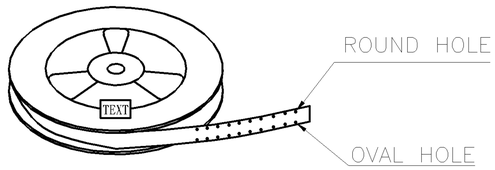

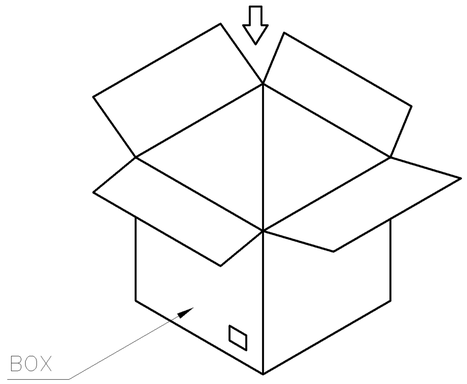

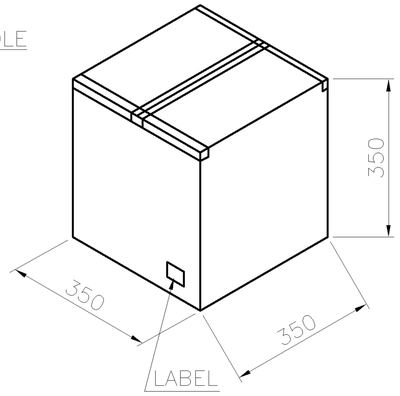

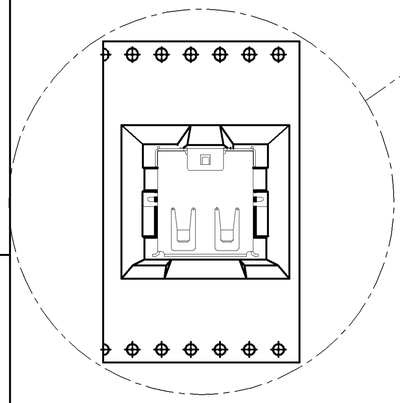

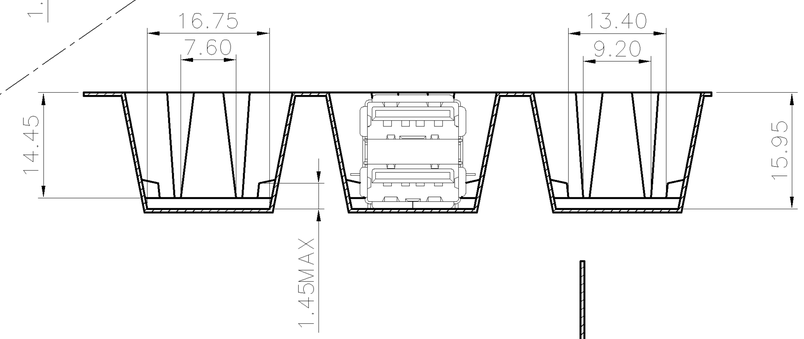

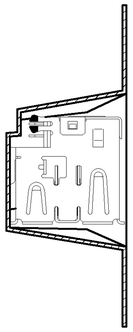

150	7	1050	8.93	4.95	6-1734062-1
PCS/ REEL	REELS/ BOX	QUANTITY (PCS)	G/W (Kg)	N/W (Kg)	PART NUMBER

THIS DRAWING IS A CONTROLLED DOCUMENT.

DIMENSIONS: MM

TOLERANCES UNLESS OTHERWISE SPECIFIED:
0 PLC ± –
1 PLC ± –
2 PLC ± –
3 PLC ± –
4 PLC ± –
ANGLES ± –

MATERIAL –

FINISH –

DWN
CHK
APVD
PRODUCT SPEC —
APPLICATION SPEC —
WEIGHT —

TE Connectivity

NAME
USB CONNECTOR, A SERIES, STACKED, OFFSET TYPE

SIZE	CAGE CODE	DRAWING NO	RESTRICTED TO
A3	00779	C-1734062	—

CUSTOMER DRAWING | SCALE — | SHEET 22 OF 24 | REV G

THIS DRAWING IS UNPUBLISHED. RELEASED FOR PUBLICATION -,- .
© COPYRIGHT - BY TYCO ELECTRONICS CORPORATION. ALL RIGHTS RESERVED.

LOC	DIST
DW	—

REVISIONS

P	LTR	DESCRIPTION	DATE	DWN	APVD
		SEE SHEET 1.			

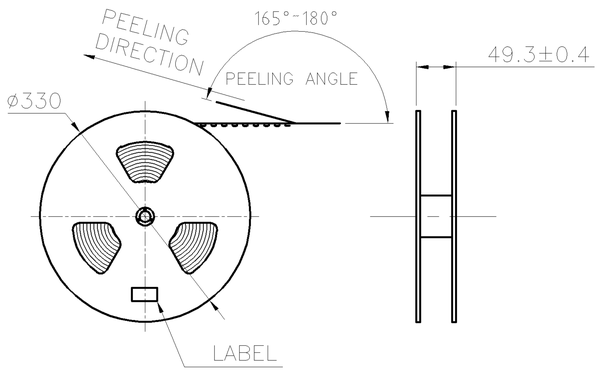

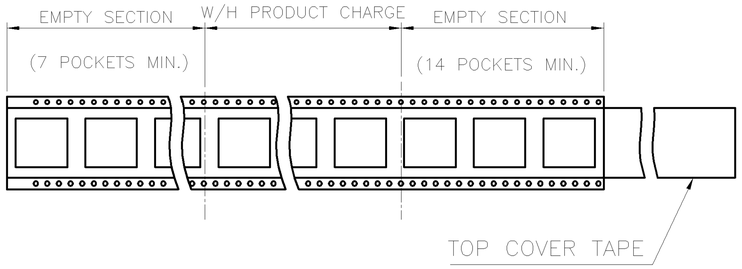

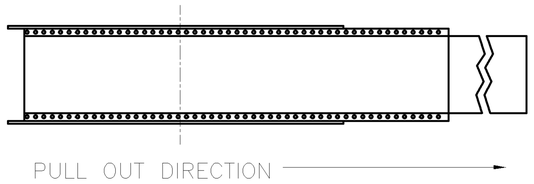

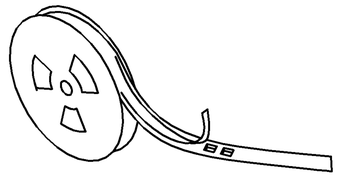

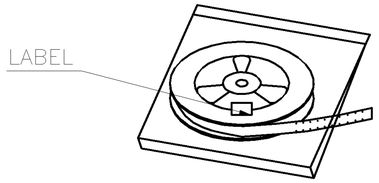

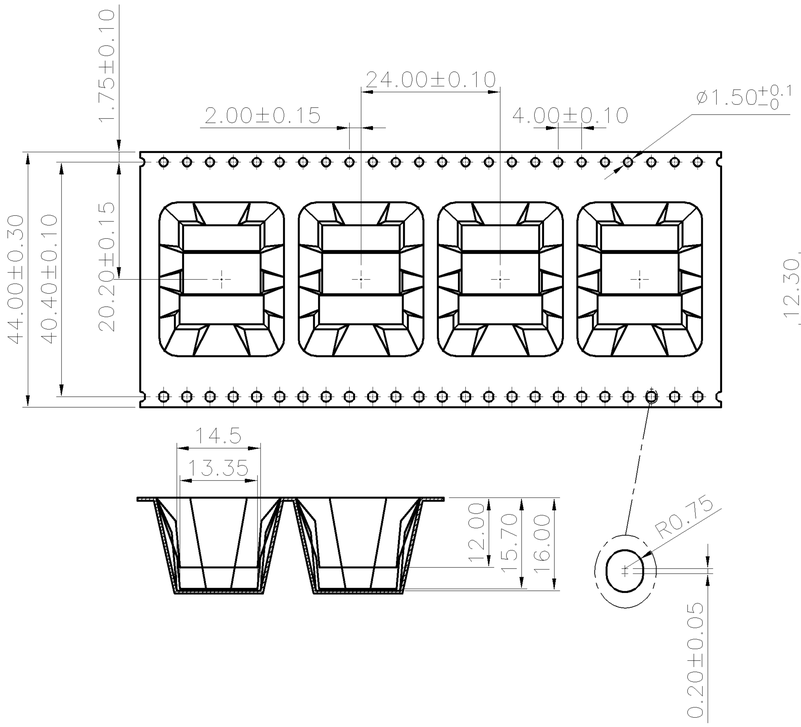

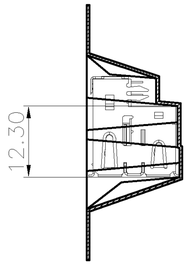

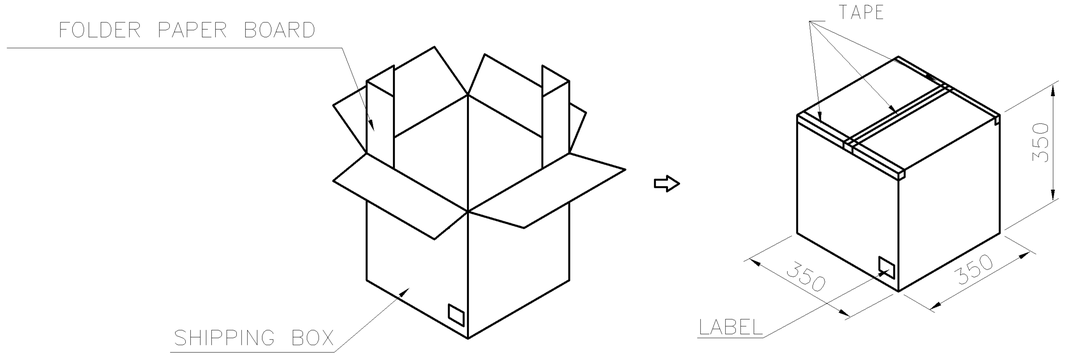

130	7	910	7.94	3.91	7-1734062-1
PCS/ REEL	REELS/ BOX	QUANTITY (PCS)	G/W (Kg)	N/W (Kg)	PART NUMBER

THIS DRAWING IS A CONTROLLED DOCUMENT.

DIMENSIONS: MM

TOLERANCES UNLESS OTHERWISE SPECIFIED:

0 PLC	± -
1 PLC	± -
2 PLC	± -
3 PLC	± -
4 PLC	± -
ANGLES	± -

MATERIAL: -

FINISH: -

DWN
CHK
APVD
PRODUCT SPEC: —
APPLICATION SPEC: —
WEIGHT: —

TE Connectivity

NAME: USB CONNECTOR, A SERIES, STACKED, OFFSET TYPE

SIZE	CAGE CODE	DRAWING NO	RESTRICTED TO
A3	00779	C-1734062	—

CUSTOMER DRAWING | SCALE — | SHEET 23 OF 24 | REV G

THIS DRAWING IS UNPUBLISHED. RELEASED FOR PUBLICATION -,- .
© COPYRIGHT - BY TYCO ELECTRONICS CORPORATION. ALL RIGHTS RESERVED.

LOC	DIST
DW	—

REVISIONS

P	LTR	DESCRIPTION	DATE	DWN	APVD
		SEE SHEET 1.			

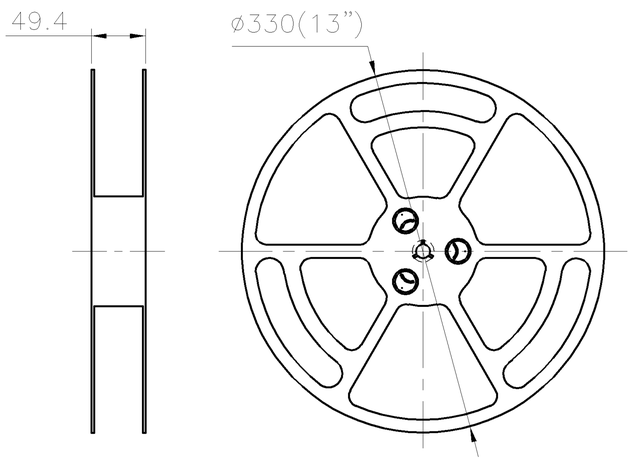

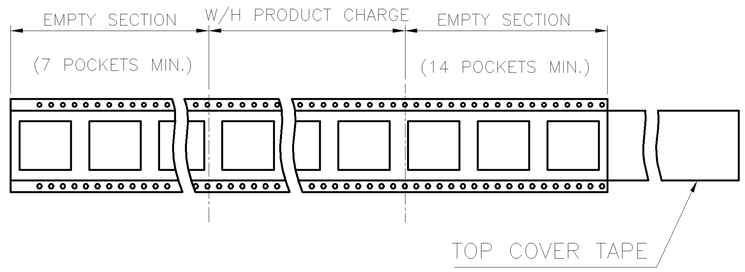

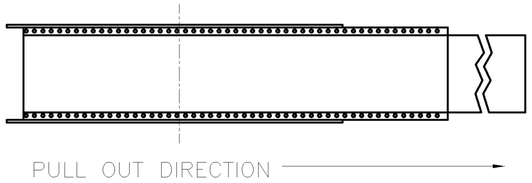

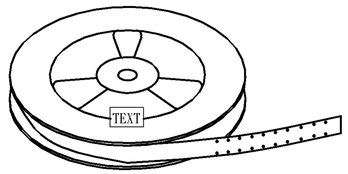

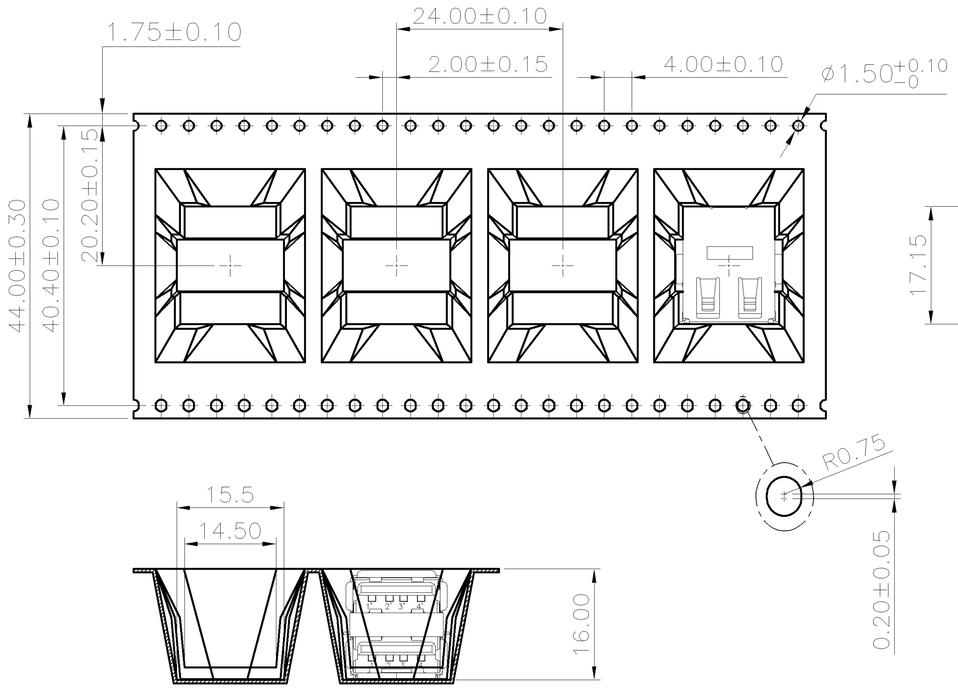

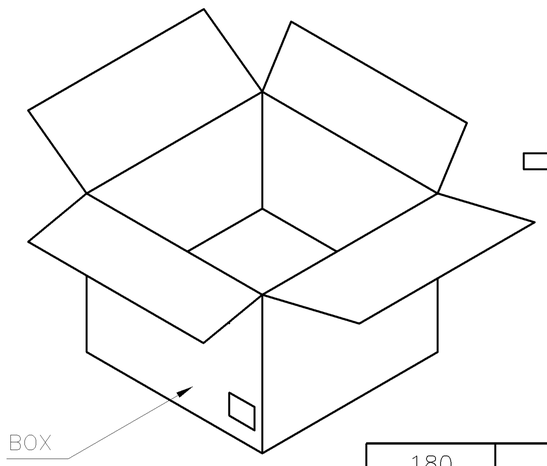

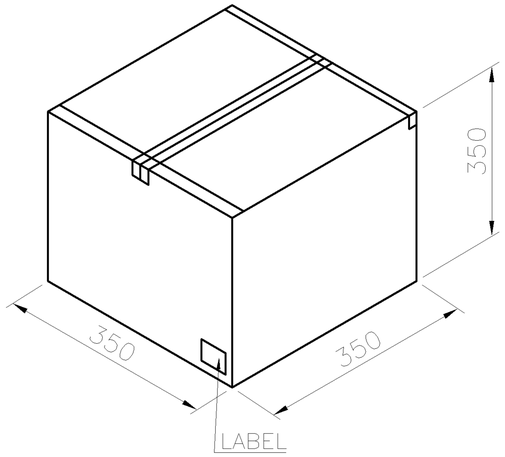

180	7	1260	9.40	5.42	8-1734062-1
PCS/ REEL	REELS/ BOX	QUANTITY (PCS)	G/W (Kg)	N/W (Kg)	PART NUMBER

THIS DRAWING IS A CONTROLLED DOCUMENT.

DIMENSIONS: MM

TOLERANCES UNLESS OTHERWISE SPECIFIED:
0 PLC ± –
1 PLC ± –
2 PLC ± –
3 PLC ± –
4 PLC ± –
ANGLES ± –

MATERIAL –

FINISH –

DWN
CHK
APVD
PRODUCT SPEC —
APPLICATION SPEC —
WEIGHT —

TE Connectivity

NAME
USB CONNECTOR, A SERIES, STACKED, OFFSET TYPE

SIZE	CAGE CODE	DRAWING NO	RESTRICTED TO
A3	00779	C-1734062	—

CUSTOMER DRAWING | SCALE — | SHEET 24 OF 24 | REV G

OCEAN CHIPS
Океан Электроники
Поставка электронных компонентов

Компания «Океан Электроники» предлагает заключение долгосрочных отношений при поставках импортных электронных компонентов на взаимовыгодных условиях!

Наши преимущества:

- Поставка оригинальных импортных электронных компонентов напрямую с производств Америки, Европы и Азии, а так же с крупнейших складов мира;
- Широкая линейка поставок активных и пассивных импортных электронных компонентов (более 30 млн. наименований);
- Поставка сложных, дефицитных, либо снятых с производства позиций;
- Оперативные сроки поставки под заказ (от 5 рабочих дней);
- Экспресс доставка в любую точку России;
- Помощь Конструкторского Отдела и консультации квалифицированных инженеров;
- Техническая поддержка проекта, помощь в подборе аналогов, поставка прототипов;
- Поставка электронных компонентов под контролем ВП;
- Система менеджмента качества сертифицирована по Международному стандарту ISO 9001;
- При необходимости вся продукция военного и аэрокосмического назначения проходит испытания и сертификацию в лаборатории (по согласованию с заказчиком);
- Поставка специализированных компонентов военного и аэрокосмического уровня качества (Xilinx, Altera, Analog Devices, Intersil, Interpoint, Microsemi, Actel, Aeroflex, Peregrine, VPT, Syfer, Eurofarad, Texas Instruments, MS Kennedy, Miteq, Cobham, E2V, MA-COM, Hittite, Mini-Circuits, General Dynamics и др.);

Компания «Океан Электроники» является официальным дистрибьютором и эксклюзивным представителем в России одного из крупнейших производителей разъемов военного и аэрокосмического назначения **«JONHON»**, а так же официальным дистрибьютором и эксклюзивным представителем в России производителя высокотехнологичных и надежных решений для передачи СВЧ сигналов **«FORSTAR»**.

AVIC JONHON

«JONHON» (основан в 1970 г.)

Разъемы специального, военного и аэрокосмического назначения:

(Применяются в военной, авиационной, аэрокосмической, морской, железнодорожной, горно- и нефтедобывающей отраслях промышленности)

«FORSTAR» (основан в 1998 г.)

ВЧ соединители, коаксиальные кабели, кабельные сборки и микроволновые компоненты:

(Применяются в телекоммуникациях гражданского и специального назначения, в средствах связи, РЛС, а так же военной, авиационной и аэрокосмической отраслях промышленности).

FORSTAR®

Телефон: 8 (812) 309-75-97 (многоканальный)
Факс: 8 (812) 320-03-32
Электронная почта: ocean@oceanchips.ru
Web: http://oceanchips.ru/
Адрес: 198099, г. Санкт-Петербург, ул. Калинина, д. 2, корп. 4, лит. А