MAX1518B

TFT-LCD DC-DC Converter with Operational Amplifiers

General Description

The MAX1518B includes a high-performance step-up regulator, two linear-regulator controllers, and high-current operational amplifiers for active-matrix, thin-film transistor (TFT), liquid-crystal displays (LCDs). Also included is a logic-controlled, high-voltage switch with adjustable delay.

The step-up DC-DC converter provides the regulated supply voltage for the panel source driver ICs. The converter is a high-frequency (1.2MHz) current-mode regulator with an integrated 14V n-channel MOSFET that allows the use of ultra-small inductors and ceramic capacitors. It provides fast transient response to pulsed loads while achieving efficiencies over 85%.

The gate-on and gate-off linear-regulator controllers provide regulated TFT gate-on and gate-off supplies using external charge pumps attached to the switching node. The MAX1518B includes five high-performance operational amplifiers. These amplifiers are designed to drive the LCD backplane (VCOM) and/or the gamma-correction divider string. The device features high output current (±150mA), fast slew rate (13V/µs), wide bandwidth (12MHz), and rail-to-rail inputs and outputs.

The MAX1518B is available in a 32-pin thin QFN package with a maximum thickness of 0.8mm for ultra-thin LCD panels.

Applications

- Notebook Computer Displays
- LCD Monitor Panels

Ordering Information

PART	TEMP RANGE	PIN-PACKAGE
MAX1518BETJ	-40°C to +100°C	32 Thin QFN (5mm x 5mm)

Pin Configuration ***appears at end of data sheet.***

Features

- 2.6V to 6.5V Input Supply Range
- 1.2MHz Current-Mode Step-Up Regulator
  - Fast Transient Response to Pulsed Load
  - High-Accuracy Output Voltage (1.5%)
  - Built-In 14V, 2.4A, 0.16Ω n-Channel MOSFET
  - High Efficiency (90%)
- Linear-Regulator Controllers for V_{GON} and V_{GOFF}
- High-Performance Operational Amplifiers
  - ±150mA Output Short-Circuit Current
  - 13V/µs Slew Rate
  - 12MHz, -3dB Bandwidth
  - Rail-to-Rail Inputs/Outputs
- Logic-Controlled, High-Voltage Switch with Adjustable Delay
- Timer-Delay Fault Latch for All Regulator Outputs
- Thermal-Overload Protection
- 0.6mA Quiescent Current

Minimal Operating Circuit

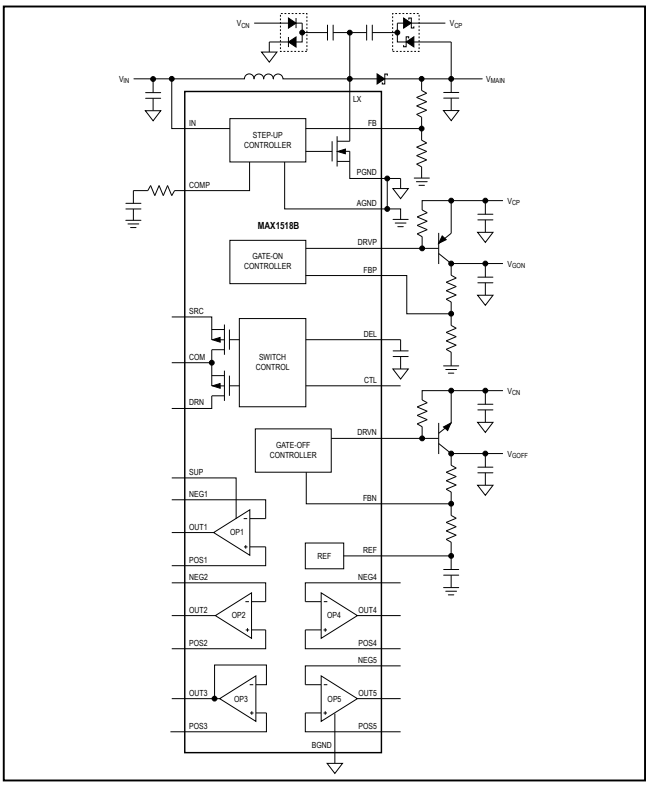

Absolute Maximum Ratings

IN, CTL to AGND.....-0.3V to +7V
COMP, FB, FBP, FBN, DEL, REF to AGND....-0.3V to (V_{IN} + 0.3V)
PGND, BGND to AGND.....±0.3V
LX to PGND.....-0.3V to +14V
SUP to AGND.....-0.3V to +14V
DRVP, SRC to AGND.....-0.3V to +30V
POS_, NEG_, OUT_ to AGND.....-0.3V to (V_{SUP} + 0.3V)
DRVN to AGND.....(V_{IN} - 30V) to (V_{IN} + 0.3V)
DRN to AGND.....-0.3V to (V_{SRC} + 0.3V)
DRN to COM.....-30V to +30V
OUT_ Maximum Continuous Output Current.....±75mA
LX Switch Maximum Continuous RMS Output Current.....1.6A
Continuous Power Dissipation (T_A = +70°C)
32-Pin Thin QFN (derate 21.2mW/°C above+70°C)...1702mW
Operating Temperature Range .....-40°C to +100°C
Junction Temperature.....+150°C
Storage Temperature Range.....-65°C to +150°C
Lead Temperature (soldering, 10s).....+300°C

Stresses beyond those listed under "Absolute Maximum Ratings" may cause permanent damage to the device. These are stress ratings only, and functional operation of the device at these or any other conditions beyond those indicated in the operational sections of the specifications is not implied. Exposure to absolute maximum rating conditions for extended periods may affect device reliability.

Electrical Characteristics

(V_{IN} = 3V, V_{SUP} = 8V, PGND = AGND = BGND = 0, I_{REF} = 25µA, **T_A = 0°C to +85°C**. Typical values are at T_A = +25°C, unless otherwise noted.)

PARAMETER	SYMBOL	CONDITIONS		MIN	TYP	MAX	UNITS
IN Supply Range	V_{IN}			2.6		6.5	V
IN Undervoltage-Lockout Threshold	V_{UVLO}	V_{IN} rising, typical hysteresis = 200mV		2.25	2.5	2.70	V
IN Quiescent Current	I_{IN}	V_{FB} = V_{FBP} = 1.4V, V_{FBN} = 0, LX not switching			0.6	0.8	mA
		V_{FB} = 1.1V, V_{FBP} = 1.4V, V_{FBN} = 0, LX switching			6	11	
Duration to Trigger Fault Condition					200		ms
REF Output Voltage		-2µA < I_{REF} < 50µA, V_{IN} = 2.6V to 5.5V		1.231	1.250	1.269	V
Thermal Shutdown		Temperature rising			+160		°C
		Hysteresis			15		
MAIN STEP-UP REGULATOR							
Output Voltage Range	V_{MAIN}			V_{IN}		13	V
Operating Frequency	f_{OSC}			1020	1200	1380	kHz
Oscillator Maximum Duty Cycle				84	87	90	%
FB Regulation Voltage	V_{FB}	No load	T_A = +25°C to +85°C	1.221	1.233	1.245	V
			T_A = 0°C to +85°C	1.218	1.233	1.247	
FB Fault Trip Level		V_{FB} falling		1.12	1.16	1.19	V
FB Load Regulation		0 < I_{MAIN} < full load, transient only			-1.6		%
FB Line Regulation		V_{IN} = 2.6V to 5.5V			+0.04	±0.15	%/ V
FB Input Bias Current		V_{FB} = 1.4V		-40		+40	nA
FB Transconductance		ΔI_{COMP} = 5µA		75	160	280	µS
FB Voltage Gain		FB to COMP			600		V/ V

Electrical Characteristics (continued)

(V_{IN} = 3V, V_{SUP} = 8V, PGND = AGND = BGND = 0, I_{REF} = 25µA, **T_A = 0°C to +85°C**. Typical values are at T_A = +25°C, unless otherwise noted.)

PARAMETER	SYMBOL	CONDITIONS	MIN	TYP	MAX	UNITS
LX On-Resistance	$R_{LX(ON)}$			160	250	mΩ
LX Leakage Current	I_{LX}	V_{LX} = 13V		0.02	40	µA
LX Current Limit	I_{LIM}	V_{FB} = 1V, duty cycle = 65%	2.5	3.0	3.5	A
Current-Sense Transconductance			3.0	3.8	5.0	S
Soft-Start Period	t_{SS}			14		ms
Soft-Start Step Size				I_{LIM}/8		A
OPERATIONAL AMPLIFIERS						
SUP Supply Range	V_{SUP}		4.5		13.0	V
SUP Supply Current	I_{SUP}	Buffer configuration, $V_{POS_}$ = 4V, no load		2.4	3.8	mA
Input Offset Voltage	V_{OS}	($V_{NEG_}$, $V_{POS_}$, $V_{OUT_}$) ≅ V_{SUP}/2, T_A = +25°C		0	12	mV
Input Bias Current	I_{BIAS}	($V_{NEG_}$, $V_{POS_}$, $V_{OUT_}$) ≅ V_{SUP}/2		+1	±50	nA
Input Common-Mode Range	V_{CM}		0		V_{SUP}	V
Common-Mode Rejection Ratio	CMRR	0 ≤ ($V_{NEG_}$, $V_{POS_}$) ≤ V_{SUP}	45			dB
Open-Loop Gain				125		dB
Output Voltage Swing, High	V_{OH}	$I_{OUT_}$ = 100µA	V_{SUP} - 15	V_{SUP} - 3		mV
		$I_{OUT_}$ = 5mA	V_{SUP} - 150	V_{SUP} - 80		
Output Voltage Swing, Low	V_{OL}	$I_{OUT_}$ = -100µA		2	15	mV
		$I_{OUT_}$ = -5mA		80	150	
Short-Circuit Current		To V_{SUP}/2, source or sink	50	150		mA
Output Source and Sink Current		($V_{NEG_}$, $V_{POS_}$, $V_{OUT_}$) ≅ V_{SUP}/2, $\lvert\Delta V_{OS}\rvert$ < 10mV ($\lvert\Delta V_{OS}\rvert$ < 30mV for OUT3)	40			mA
Power-Supply Rejection Ratio	PSRR	DC, 6V ≤ V_{SUP} ≤ 13V, ($V_{NEG_}$, $V_{POS_}$) ≅ V_{SUP}/2	60			dB
Slew Rate				13		V/µs
-3dB Bandwidth		R_L = 10kΩ, C_L = 10pF, buffer configuration		12		MHz
Gain-Bandwidth Product	GBW	Buffer configuration		8		MHz
GATE-ON LINEAR-REGULATOR CONTROLLER						
FBP Regulation Voltage	V_{FBP}	I_{DRVP} = 100µA	1.231	1.250	1.269	V
FBP Fault Trip Level		V_{FBP} falling	0.96	1.00	1.04	V
FBP Input Bias Current	I_{FBP}	V_{FBP} = 1.4V	-50		+50	nA
FBP Effective Load-Regulation Error (Transconductance)		V_{DRVP} = 10V, I_{DRVP} = 50µA to 1mA		-0.7	-1.5	%
FBP Line (IN) Regulation Error		I_{DRVP} = 100µA, 2.6V < V_{IN} < 5.5V		±1.5	±5	mV

Electrical Characteristics (continued)

(V_{IN} = 3V, V_{SUP} = 8V, PGND = AGND = BGND = 0, I_{REF} = 25µA, **T_A = 0°C to +85°C**. Typical values are at T_A = +25°C, unless otherwise noted.)

PARAMETER	SYMBOL	CONDITIONS	MIN	TYP	MAX	UNITS
DRVP Sink Current	I_{DRVP}	V_{FBP} = 1.1V, V_{DRVP} = 10V	1	5		mA
DRVP Off-Leakage Current		V_{FBP} = 1.4V, V_{DRVP} = 28V		0.01	10	µA
Soft-Start Period	t_{SS}			14		ms
Soft-Start Step Size				V_{REF}/128		V
GATE-OFF LINEAR-REGULATOR CONTROLLER						
FBN Regulation Voltage	V_{FBN}	I_{DRVN} = 100µA	235	250	265	mV
FBN Fault Trip Level		V_{FBN} rising	370	420	470	mV
FBN Input Bias Current	I_{FBN}	V_{FBN} = 0	-50		+50	nA
FBN Effective Load-Regulation Error (Transconductance)		V_{DRVN} = -10V, I_{DRVN} = 50µA to 1mA		11	25	mV
FBN Line (IN) Regulation Error		I_{DRVN} = 0.1mA, 2.6V < V_{IN} < 5.5V		±0.7	±5	mV
DRVN Source Current	I_{DRVN}	V_{FBN} = 500mV, V_{DRVN} = -10V	1	4		mA
DRVN Off-Leakage Current		V_{FBN} = 0V, V_{DRVN} = -25V		-0.01	-10	µA
Soft-Start Period	t_{SS}			14		ms
Soft-Start Step Size				V_{REF}/128		V
POSITIVE GATE-DRIVER TIMING AND CONTROL SWITCHES						
DEL Capacitor Charge Current		During startup, V_{DEL} = 1V	4	5	6	µA
DEL Turn-On Threshold	$V_{TH(DEL)}$		1.19	1.25	1.31	V
DEL Discharge Switch On- Resistance		During UVLO, V_{IN} = 2.2V		20		Ω
CTL Input Low Voltage		V_{IN} = 2.6V to 5.5V			0.6	V
CTL Input High Voltage		V_{IN} = 2.6V to 5.5V	2			V
CTL Input Leakage Current		CTL = AGND or IN	-1		+1	µA
CTL-to-SRC Propagation Delay				100		ns
SRC Input Voltage Range					28	V
SRC Input Current	I_{SRC}	V_{DEL} = 1.5V, CTL = IN		50	100	µA
		V_{DEL} = 1.5V, CTL = AGND		15	30	
SRC to COM Switch On-Resistance	$R_{SRC(ON)}$	V_{DEL} = 1.5V, CTL = IN		6	12	Ω
DRN to COM Switch On-Resistance	$R_{DRN(ON)}$	V_{DEL} = 1.5V, CTL = AGND		35	70	Ω

Electrical Characteristics (continued)

(V_{IN} = 3V, V_{SUP} = 8V, PGND = AGND = BGND = 0, I_{REF} = 25µA, **T_A = 0°C to +85°C**. Typical values are at T_A = +25°C, unless otherwise noted.)

PARAMETER	SYMBOL	CONDITIONS	MIN	TYP	MAX	UNITS
IN Supply Range	V_{IN}		2.6		5.5	V
IN Undervoltage-Lockout Threshold	V_{UVLO}	V_{IN} rising, typical hysteresis = 150mV	2.250		2.715	V
IN Quiescent Current	I_{IN}	V_{FB} = V_{FBP} = 1.4V, V_{FBN} = 0, LX not switching			0.8	mA
		V_{FB} = 1.1V, V_{FBP} = 1.4V, V_{FBN} = 0, LX switching			11	
REF Output Voltage		-2µA < I_{REF} < 50µA, V_{IN} = 2.6V to 5.5V	1.222		1.269	V
MAIN STEP-UP REGULATOR						
Output Voltage Range	V_{MAIN}		V_{IN}		13	V
Operating Frequency	f_{OSC}		1020		1380	kHz
FB Regulation Voltage	V_{FB}	No load	1.212		1.250	V
FB Line Regulation		V_{IN} = 2.6V to 5.5V			±0.15	%/ V
FB Input Bias Current		V_{FB} = 1.4V	-40		+40	nA
FB Transconductance		ΔI_{COMP} = 5µA	75		300	µS
LX On-Resistance	$R_{LX(ON)}$				250	mΩ
LX Current Limit	I_{LIM}	V_{FB} = 1V, duty cycle = 65%	2.5		3.5	A
OPERATIONAL AMPLIFIERS						
SUP Supply Range	V_{SUP}		4.5		13.0	V
SUP Supply Current	I_{SUP}	Buffer configuration, $V_{POS_}$ = 4V, no load			3.8	mA
Input Offset Voltage	V_{OS}	($V_{NEG_}$, $V_{POS_}$, $V_{OUT_}$) ≅ V_{SUP}/2			12	mV
Input Common-Mode Range	V_{CM}		0		V_{SUP}	V
Output Voltage Swing, High	V_{OH}	$I_{OUT_}$ = 100µA	V_{SUP} -15			mV
		$I_{OUT_}$ = 5mA	V_{SUP} -150			
Output Voltage Swing, Low	V_{OL}	$I_{OUT_}$ = -100µA			15	mV
		$I_{OUT_}$ = -5mA			150	
Short-Circuit Current		To V_{SUP}/2 — Source	50			mA
		To V_{SUP}/2 — Sink	50			
Output Source-and-Sink Current		($V_{NEG_}$, $V_{POS_}$, $V_{OUT_}$) ≅ V_{SUP}/2, $\lvert\Delta V_{OS}\rvert$ < 10mV ($\lvert V_{OS}\rvert$ < 30mV for OUT3)	40			mA
GATE-ON LINEAR-REGULATOR CONTROLLER						
FBP Regulation Voltage	V_{FBP}	I_{DRVP} = 100µA	1.218		1.269	V
FBP Effective Load-Regulation Error (Transconductance)		V_{DRVP} = 10V, I_{DRVP} = 50µA to 1mA			-2	%
FBP Line (IN) Regulation Error		I_{DRVP} = 100µA, 2.6V < V_{IN} < 5.5V			5	mV
DRVP Sink Current	I_{DRVP}	V_{FBP} = 1.1V, V_{DRVP} = 10V	1			mA

Electrical Characteristics (continued)

(V_{IN} = 3V, V_{SUP} = 8V, PGND = AGND = BGND = 0, I_{REF} = 25µA, **T_A = 0°C to +85°C**. Typical values are at T_A = +25°C, unless otherwise noted.)

PARAMETER	SYMBOL	CONDITIONS	MIN	TYP	MAX	UNITS
GATE-OFF LINEAR-REGULATOR CONTROLLER						
FBN Regulation Voltage	V_{FBN}	I_{DRVN} = 100µA	235		265	mV
FBN Effective Load-Regulation Error (Transconductance)		V_{DRVN} = -10V, I_{DRVN} = 50µA to 1mA			25	mV
FBN Line (IN) Regulation Error		I_{DRVN} = 0.1mA, 2.6V < V_{IN} < 5.5V			5	mV
DRVN Source Current	I_{DRVN}	V_{FBN} = 500mV, V_{DRVN} = -10V	1			mA
POSITIVE GATE-DRIVER TIMING AND CONTROL SWITCHES						
DEL Capacitor Charge Current		During startup, V_{DEL} = 1V	4		6	µA
DEL Turn-On Threshold	$V_{TH(DEL)}$		1.19		1.31	V
CTL Input Low Voltage		V_{IN} = 2.6V to 5.5V			0.6	V
CTL Input High Voltage		V_{IN} = 2.6V to 5.5V	2			V
SRC Input Voltage Range					28	V
SRC Input Current	I_{SRC}	V_{DEL} = 1.5V, CTL = IN			100	µA
		V_{DEL} = 1.5V, CTL = AGND			30	
SRC-to-COM Switch On- Resistance	$R_{SRC(ON)}$	V_{DEL} = 1.5V, CTL = IN			12	Ω
DRN-to-COM Switch On- Resistance	$R_{DRN(ON)}$	V_{DEL} = 1.5V, CTL = AGND			70	Ω

Note 1: Specifications to -40°C are guaranteed by design, not production tested.

Typical Operating Characteristics

(Circuit of Figure 1. V_{IN} = 5V, V_{MAIN} = 13V, V_{GON} = 24V, V_{GOFF} = -8V, V_{OUT1} = V_{OUT2} = V_{OUT3} = V_{OUT4} = V_{OUT5} = 6.5V, T_A = +25°C unless otherwise noted.)

STEP-UP EFFICIENCY vs. LOAD CURRENT

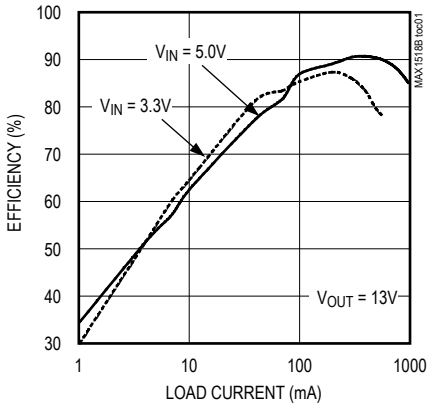

SWITCHING FREQUENCY vs. INPUT VOLTAGE

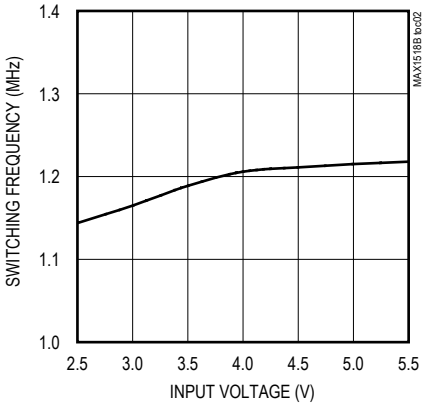

STEP-UP SUPPLY CURRENT vs. SUPPLY VOLTAGE

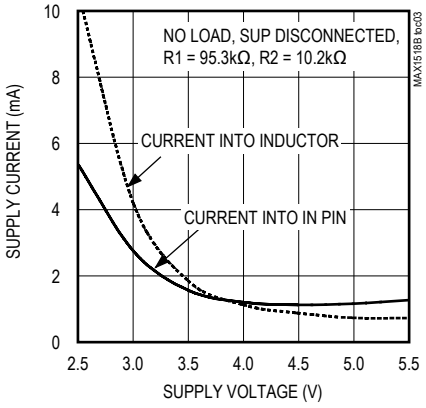

STEP-UP REGULATOR SOFT-START (HEAVY LOAD)

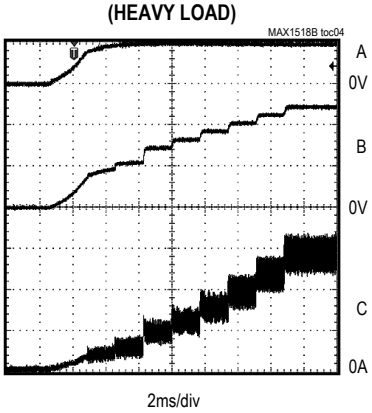

A: V_{IN}, 5V/div
B: V_{MAIN}, 5V/div
C: INDUCTOR CURRENT, 1A/div

STEP-UP REGULATOR PULSED LOAD-TRANSIENT RESPONSE

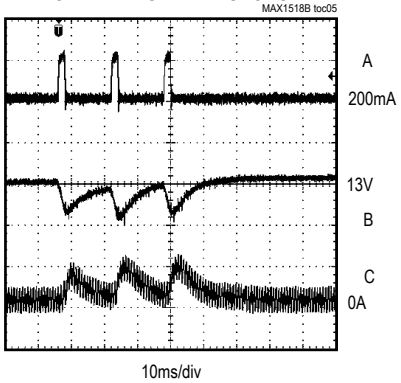

A: LOAD CURRENT, 1A/div
B: V_{MAIN}, 200mV/div, AC-COUPLED
C: INDUCTOR CURRENT, 1A/div

TIMER DELAYED OVERLOAD PROTECTION

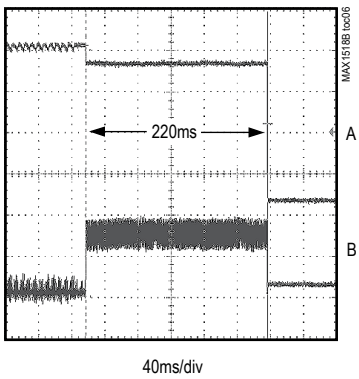

A: V_{MAIN}, 2V/div
B: INDUCTOR CURRENT, 1A/div

REF VOLTAGE LOAD REGULATION

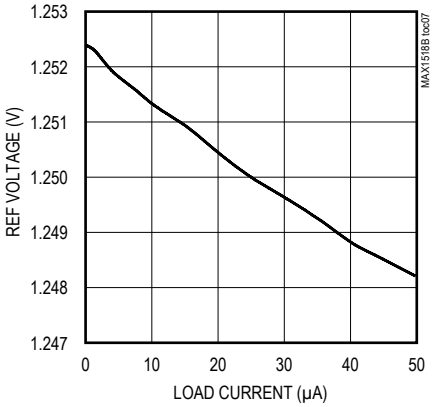

Typical Operating Characteristics (continued)

(Circuit of Figure 1. V_{IN} = 5V, V_{MAIN} = 13V, V_{GON} = 24V, V_{GOFF} = -8V, V_{OUT1} = V_{OUT2} = V_{OUT3} = V_{OUT4} = V_{OUT5} = 6.5V, T_A = +25°C unless otherwise noted.)

GATE-ON REGULATOR LINE REGULATION

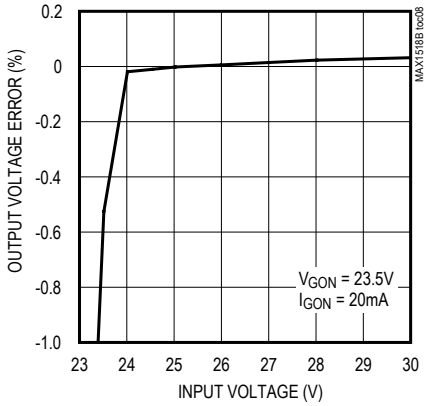

GATE-ON REGULATOR LOAD REGULATION

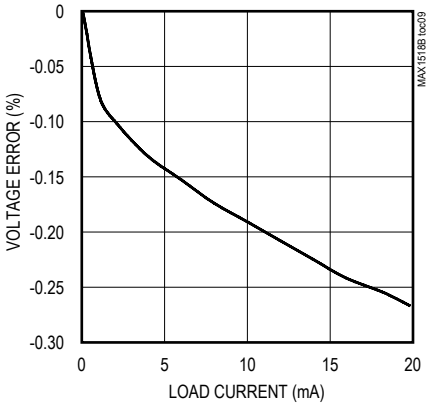

GATE-OFF REGULATOR LINE REGULATION

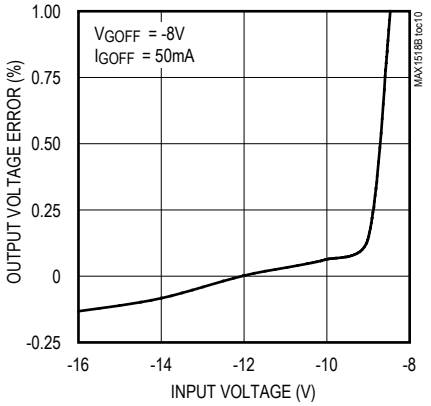

GATE-OFF REGULATOR LOAD REGULATION

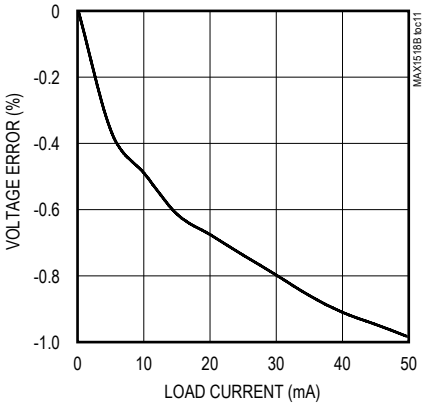

POWER-UP SEQUENCE

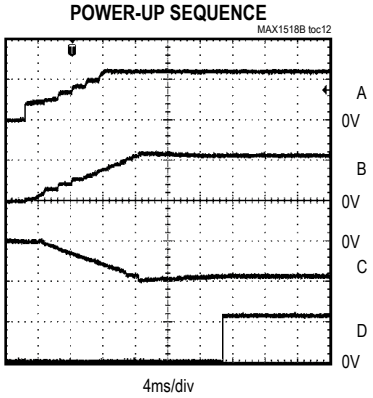

A: V_{MAIN}, 10V/div
B: V_{SRC}, 20V/div
C: V_{GOFF}, 10V/div
D: V_{GON}, 20V/div

SUP SUPPLY CURRENT vs. SUP VOLTAGE

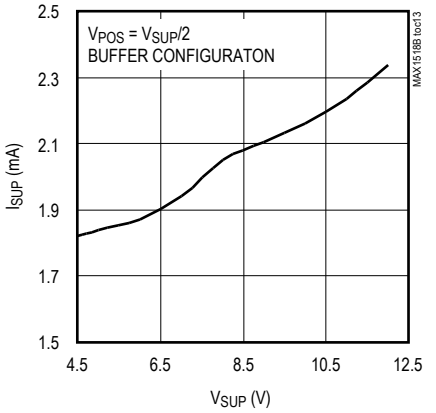

OPERATIONAL-AMPLIFIER RAIL-TO-RAIL INPUT/OUTPUT

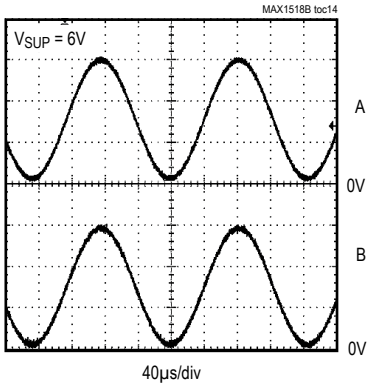

A: INPUT SIGNAL, 2V/div
B: OUTPUT SIGNAL, 2V/div

Typical Operating Characteristics (continued)

(Circuit of Figure 1. V_{IN} = 5V, V_{MAIN} = 13V, V_{GON} = 24V, V_{GOFF} = -8V, V_{OUT1} = V_{OUT2} = V_{OUT3} = V_{OUT4} = V_{OUT5} = 6.5V, T_A = +25°C unless otherwise noted.)

OPERATIONAL-AMPLIFIER LOAD-TRANSIENT RESPONSE

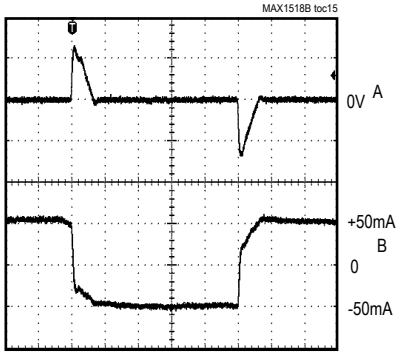

A: OUTPUT VOLTAGE, 1V/div, AC-COUPLED
B: OUTPUT CURRENT, 50mA/div

OPERATIONAL-AMPLIFIER LARGE-SIGNAL STEP RESPONSE

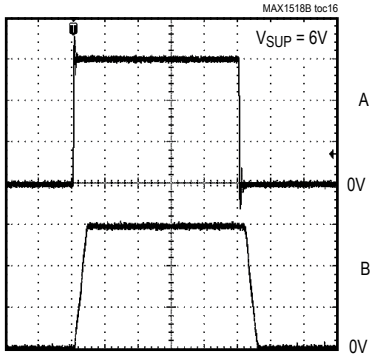

A: INPUT SIGNAL, 2V/div
B: OUTPUT SIGNAL, 2V/div

OPERATIONAL-AMPLIFIER SMALL-SIGNAL STEP RESPONSE

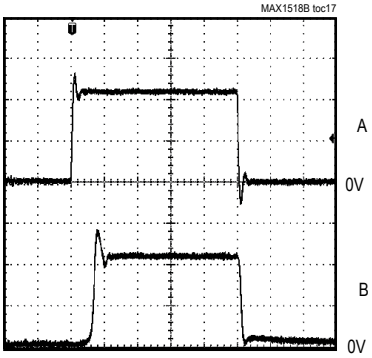

A: INPUT SIGNAL, 100mV/div
B: OUTPUT SIGNAL, 100mV/div

Pin Description

PIN	NAME	FUNCTION
1	SRC	Switch Input. Source of the internal high-voltage p-channel MOSFET. Bypass SRC to PGND with a minimum 0.1µF capacitor close to the pins.
2	REF	Reference Bypass Terminal. Bypass REF to AGND with a minimum of 0.22µF close to the pins.
3	AGND	Analog Ground for Step-Up Regulator and Linear Regulators. Connect to power ground (PGND) underneath the IC.
4	PGND	Power Ground. PGND is the source of the main step-up n-channel power MOSFET. Connect PGND to the output-capacitor ground terminals through a short, wide PCB trace. Connect to analog ground (AGND) underneath the IC.
5	OUT1	Operational-Amplifier 1 Output
6	NEG1	Operational-Amplifier 1 Inverting Input
7	POS1	Operational-Amplifier 1 Noninverting Input
8	OUT2	Operational-Amplifier 2 Output
9	NEG2	Operational-Amplifier 2 Inverting Input
10	POS2	Operational-Amplifier 2 Noninverting Input
11	BGND	Analog Ground for Operational Amplifiers. Connect to power ground (PGND) underneath the IC.
12	POS3	Operational-Amplifier 3 Noninverting Input
13	OUT3	Operational-Amplifier 3 Output
14	SUP	Operational-Amplifier Power Input. Positive supply rail for the operational amplifiers. Typically connected to V_{MAIN}. Bypass SUP to BGND with a 0.1µF capacitor.
15	POS4	Operational-Amplifier 4 Noninverting Input
16	NEG4	Operational-Amplifier 4 Inverting Input

Pin Description (continued)

PIN	NAME	FUNCTION
17	OUT4	Operational-Amplifier 4 Output
18	POS5	Operational-Amplifier 5 Noninverting Input
19	NEG5	Operational-Amplifier 5 Inverting Input
20	OUT5	Operational-Amplifier 5 Output
21	LX	n-Channel Power MOSFET Drain and Switching Node. Connect the inductor and Schottky diode to LX and minimize the trace area for lowest EMI.
22	IN	Supply Voltage Input. IN can range from 2.6V to 6.5V.
23	FB	Step-Up Regulator Feedback Input. Regulates to 1.236V (nominal). Connect a resistive voltage-divider from the output (V_{MAIN}) to FB to analog ground (AGND). Place the divider within 5mm of FB.
24	COMP	Step-Up Regulator Error-Amplifier Compensation Point. Connect a series RC from COMP to AGND. See the *Loop Compensation* section for component selection guidelines.
25	FBP	Gate-On Linear-Regulator Feedback Input. FBP regulates to 1.25V (nominal). Connect FBP to the center of a resistive voltage-divider between the regulator output and AGND to set the gate-on linear-regulator output voltage. Place the resistive voltage-divider close to the pin.
26	DRVP	Gate-On Linear-Regulator Base Drive. Open drain of an internal n-channel MOSFET. Connect DRVP to the base of an external pnp pass transistor. See the *Pass-Transistor Selection* section.
27	FBN	Gate-Off Linear-Regulator Feedback Input. FBN regulates to 250mV (nominal). Connect FBN to the center of a resistive voltage-divider between the regulator output and REF to set the gate-off linear-regulator output voltage. Place the resistive voltage-divider close to the pin.
28	DRVN	Gate-Off Linear-Regulator Base Drive. Open drain of an internal p-channel MOSFET. Connect DRVN to the base of an external npn pass transistor. See the *Pass-Transistor Selection* section.
29	DEL	High-Voltage Switch Delay Input. Connect a capacitor from DEL to AGND to set the high-voltage switch startup delay.
30	CTL	High-Voltage Switch Control Input. When CTL is high, the high-voltage switch between COM and SRC is on and the high-voltage switch between COM and DRN is off. When CTL is low, the high-voltage switch between COM and SRC is off and the high-voltage switch between COM and DRN is on. CTL is inhibited by the undervoltage lockout and when the voltage on DEL is less than 1.25V.
31	DRN	Switch Input. Drain of the internal high-voltage back-to-back p-channel MOSFETs connected to COM.
32	COM	Internal High-Voltage MOSFET Switch Common Terminal. Do not allow the voltage on COM to exceed V_{SRC}.

Typical Operating Circuit

The MAX1518B Typical Operating Circuit (Figure 1) is a complete power-supply system for TFT LCDs. The circuit generates a +13V source-driver supply and +24V and -8V gate-driver supplies. The input voltage range for the IC is from +2.6V to +6.5V. The listed load currents in Figure 1 are available from a +4.5V to +5.5V supply. Table 1 lists some recommended components, and Table 2 lists the contact information of component suppliers.

Detailed Description

The MAX1518B contains a high-performance step-up switching regulator, two low-cost linear-regulator controllers, multiple high-current operational amplifiers, and startup timing and level-shifting functionality useful for active-matrix TFT LCDs. Figure 2 shows the MAX1518B Functional Diagram.

Main Step-Up Regulator

The main step-up regulator employs a current-mode, fixed-frequency PWM architecture to maximize loop bandwidth and provide fast transient response to pulsed loads typical of TFT-LCD panel source drivers. The 1.2MHz switching frequency allows the use of low-profile inductors and ceramic capacitors to minimize the thickness of LCD panel designs. The integrated high-efficiency MOSFET and the IC's built-in digital soft-start functions reduce the number of external components required while controlling inrush currents. The output voltage can be set from V_{IN} to 13V with an external resistive voltage-divider. To generate an output voltage greater than 13V, an external cascoded MOSFET is needed. See the *Generating Output Voltages > 13V* section in the *Design Procedures*.

The regulator controls the output voltage and the power delivered to the output by modulating the duty cycle (D) of the internal power MOSFET in each switching cycle. The duty cycle of the MOSFET is approximated by:

$$D \approx \frac{V_{MAIN} - V_{IN}}{V_{MAIN}}$$

Table 1. Component List

DESIGNATION	DESCRIPTION
C1	22µF, 6.3V X5R ceramic capacitor (1210) TDK C3225X5R0J227M
C2	22µF, 16V X5R ceramic capacitor (1812) TDK C4532X5X1C226M
D1	3A, 30V Schottky diode (M-flat) Toshiba CMS02
D2, D3	200mA, 100V, dual ultra-fast diodes (SOT23) Fairchild MMBD4148SE
L1	3.0µH, 3A inductor Sumida CDRH6D28-3R0
Q1	200mA, 40V pnp bipolar transistor (SOT23) Fairchild MMBT3906
Q2	200mA, 40V npn bipolar transistor (SOT23) Fairchild MMBT3904

Figure 3 shows the Functional Diagram of the step-up regulator. An error amplifier compares the signal at FB to 1.236V and changes the COMP output. The voltage at COMP sets the peak inductor current. As the load varies, the error amplifier sources or sinks current to the COMP output accordingly to produce the inductor peak current necessary to service the load. To maintain stability at high duty cycles, a slope-compensation signal is summed with the current-sense signal.

On the rising edge of the internal clock, the controller sets a flip-flop, turning on the n-channel MOSFET and applying the input voltage across the inductor. The current through the inductor ramps up linearly, storing energy in its magnetic field. Once the sum of the current-feedback signal and the slope compensation exceeds the COMP voltage, the controller resets the flip-flop and turns off the MOSFET. Since the inductor current is continuous, a transverse potential develops across the inductor that turns on the diode (D1). The voltage across the inductor then becomes the difference between the output voltage and the input voltage.

Table 2. Component Suppliers

SUPPLIER	PHONE	FAX	WEBSITE
Fairchild	408-822-2000	408-822-2102	www.fairchildsemi.com
Sumida	847-545-6700	847-545-6720	www.sumida.com
TDK	847-803-6100	847-390-4405	www.component.tdk.com
Toshiba	949-455-2000	949-859-3963	www.toshiba.com/taec

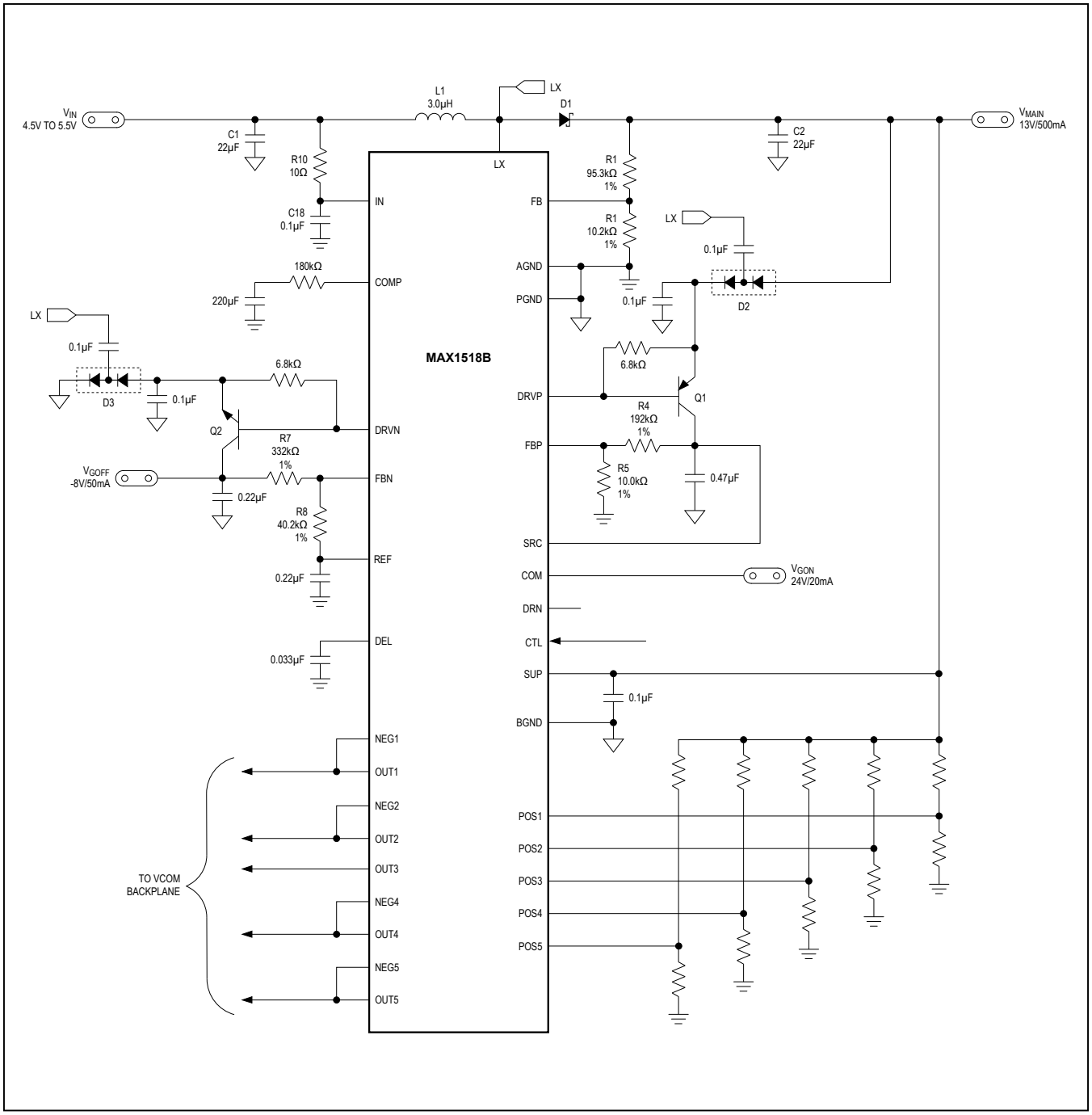

Figure 1. Typical Operating Circuit

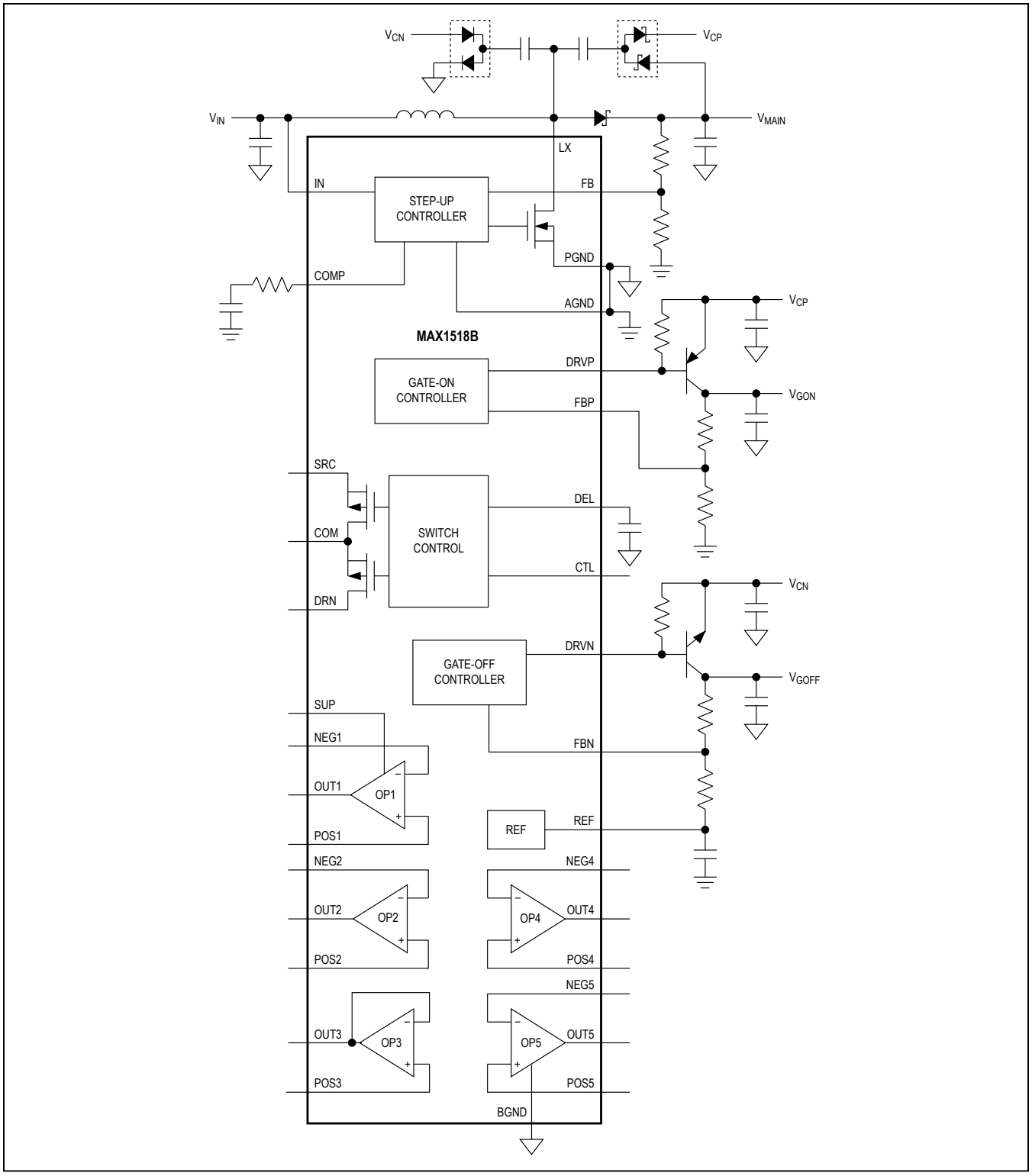

Figure 2. MAX1518B Functional Diagram

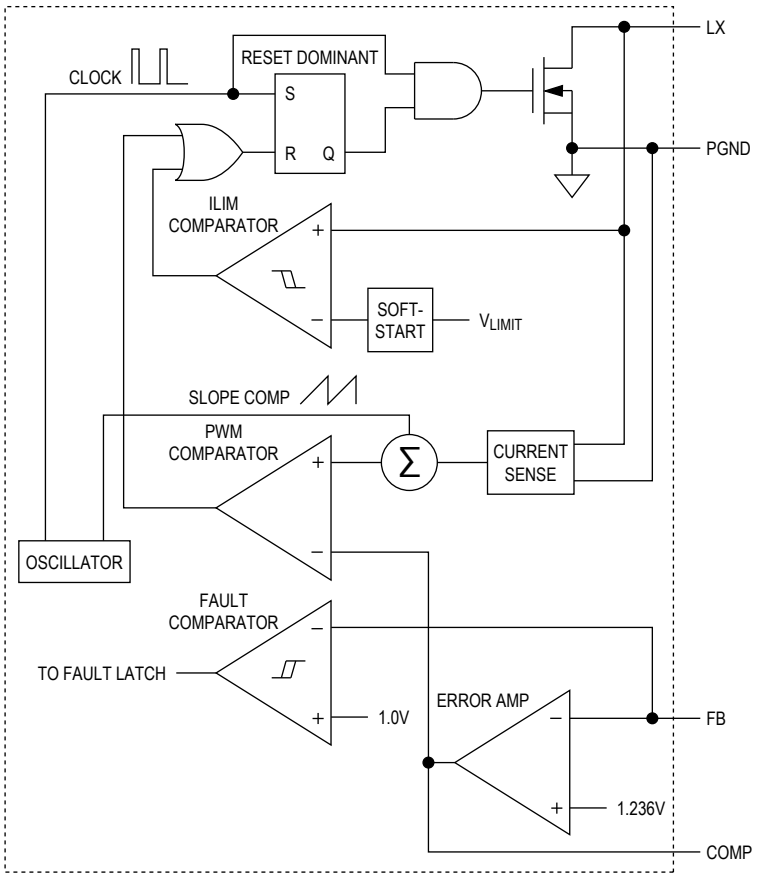

Figure 3. Step-Up Regulator Functional Diagram

This discharge condition forces the current through the inductor to ramp back down, transferring the energy stored in the magnetic field to the output capacitor and the load. The MOSFET remains off for the rest of the clock cycle.

Gate-On Linear-Regulator Controller, REG P

The gate-on linear-regulator controller (REG P) is an analog gain block with an open-drain n-channel output. It drives an external pnp pass transistor with a 6.8kΩ base-to-emitter resistor (Figure 1). Its guaranteed base-drive sink current is at least 1mA. The regulator including Q1 in Figure 1 uses a 0.47µF ceramic output capacitor and is designed to deliver 20mA at 24V. Other output voltages and currents are possible with the proper pass transistor and output capacitor. See the *Pass-Transistor Selection* and *Stability Requirements* sections.

REG P is typically used to provide the TFT-LCD gate drivers' gate-on voltage. Use a charge pump with as many stages as necessary to obtain a voltage exceeding the required gate-on voltage (see the *Selecting the Number of Charge-Pump Stages* section). Note the voltage rating of the DRVP is 28V. If the charge-pump output voltage can exceed 28V, an external cascode npn transistor should be added, as shown in Figure 4. Alternately, the linear regulator can control an intermediate charge-pump stage while regulating the final charge-pump output (Figure 5).

REG P is enabled after the REF voltage exceeds 1.0V. Each time it is enabled, the controller goes through a soft-start routine that ramps up its internal reference DAC in 128 steps.

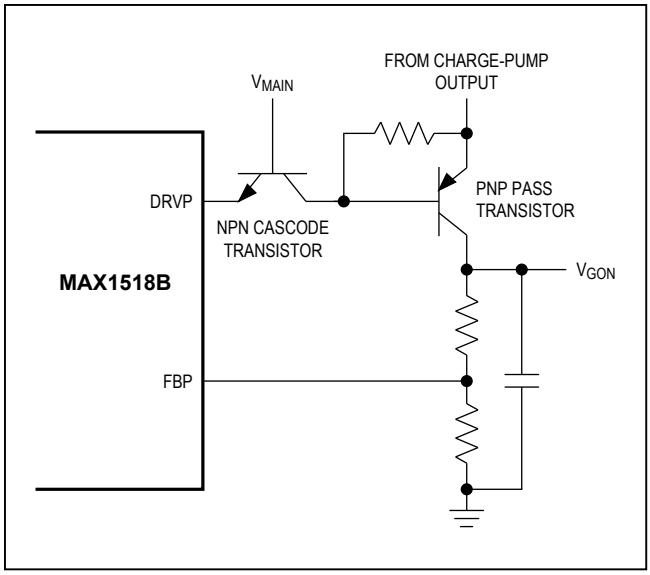

Figure 4. Using Cascoded npn for Charge-Pump Output Voltages > 28V

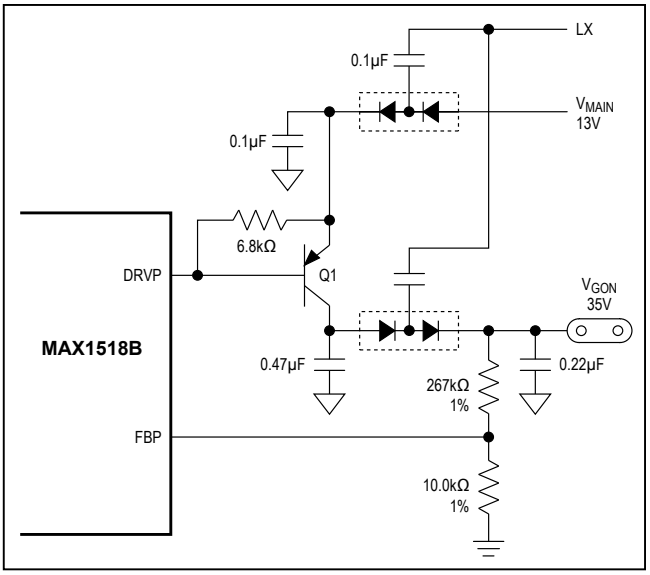

Figure 5. The linear regulator controls the intermediate charge-pump stage.

Gate-Off Linear-Regulator Controller, REG N

The gate-off linear-regulator controller (REG N) is an analog gain block with an open-drain p-channel output. It drives an external npn pass transistor with a 6.8kΩ base-to-emitter resistor (Figure 1). Its guaranteed base-drive source current is at least 1mA. The regulator including Q2 in Figure 1 uses a 0.47µF ceramic output capacitor and is designed to deliver 50mA at -8V. Other output voltages and currents are possible with the proper pass transistor and output capacitor (see the *Pass-Transistor Selection* and *Stability Requirements* sections).

REG N is typically used to provide the TFT-LCD gate drivers' gate-off voltage. A negative voltage can be produced using a charge-pump circuit as shown in Figure 1. REG N is enabled after the voltage on REF exceeds 1.0V. Each time it is enabled, the control goes through a soft-start routine that ramps down its internal reference DAC from V_{REF} to 250mV in 128 steps.

Operational Amplifiers

The MAX1518B has five operational amplifiers. The operational amplifiers are typically used to drive the LCD backplane (VCOM) or the gamma-correction divider string. They feature ±150mA output short-circuit current, 13V/µs slew rate, and 12MHz bandwidth. The rail-to-rail input and output capability maximizes system flexibility.

Short-Circuit Current Limit

The operational amplifiers limit short-circuit current to approximately ±150mA if the output is directly shorted to SUP or to BGND. If the short-circuit condition persists, the junction temperature of the IC rises until it reaches the thermal-shutdown threshold (+160°C typ). Once the junction temperature reaches the thermal-shutdown threshold, an internal thermal sensor immediately sets the thermal fault latch, shutting off all the IC's outputs. The device remains inactive until the input voltage is cycled.

Driving Pure Capacitive Load

The operational amplifiers are typically used to drive the LCD backplane (VCOM) or the gamma-correction divider string. The LCD backplane consists of a distributed series capacitance and resistance, a load that can be easily driven by the operational amplifier. However, if the operational amplifier is used in an application with a pure capacitive load, steps must be taken to ensure stable operation.

As the operational amplifier's capacitive load increases, the amplifier's bandwidth decreases and gain peaking increases. A 5Ω to 50Ω small resistor placed between OUT_ and the capacitive load reduces peaking but also reduces the gain. An alternative method of reducing peaking is to place a series RC network (snubber) in parallel with the capacitive load. The RC network does not continuously load the output or reduce the gain. Typical values of the resistor are between 100Ω and 200Ω, and the typical value of the capacitor is 10nF.

Undervoltage Lockout (UVLO)

The undervoltage-lockout (UVLO) circuit compares the input voltage at IN with the UVLO threshold (2.5V rising, 2.30V falling, typ) to ensure the input voltage is high enough for reliable operation. The 200mV (typ) hysteresis prevents supply transients from causing a restart. Once the input voltage exceeds the UVLO rising threshold, startup begins. When the input voltage falls below the UVLO falling threshold, the controller turns off the main step-up regulator, turns off the linear-regulator outputs, and disables the switch control block; the operational-amplifier outputs are high impedance.

Reference Voltage (REF)

The reference output is nominally 1.25V and can source at least 50µA (see the *Typical Operating Characteristics*). Bypass REF with a 0.22µF ceramic capacitor connected between REF and AGND.

Power-Up Sequence and Soft-Start

Once the voltage on IN exceeds approximately 1.7V, the reference turns on. With a 0.22µF REF bypass capacitor, the reference reaches its regulation voltage of 1.25V in approximately 1ms. When the reference voltage exceeds 1.0V, the ICs enable the main step-up regulator, the gate-on linear-regulator controller, and the gate-off linear-regulator controller simultaneously.

The IC employs soft-start for each regulator to minimize inrush current and voltage overshoot and to ensure a well-defined startup behavior. During the soft-start, the main step-up regulator directly limits the peak inductor current. The current-limit level is increased through the soft-start period from zero up to the full current-limit value in eight equal current steps (ILIM/8). The maximum load current is available after the output voltage reaches regulation (which terminates soft-start), or after the soft-start timer expires. Both linear-regulator controllers use a 7-bit soft-start DAC. For the gate-on linear regulator, the DAC output is stepped in 128 steps from zero up to the reference voltage. For the gate-off linear regulator, the DAC output steps from the reference down to 250mV in 128 steps. The soft-start duration is 14ms (typ) for all three regulators.

A capacitor (C_{DEL}) from DEL to AGND determines the switch-control-block startup delay. After the input voltage exceeds the UVLO threshold (2.5V typ) and the soft-start routine for each regulator is complete and there is no fault detected, a 5µA current source starts charging

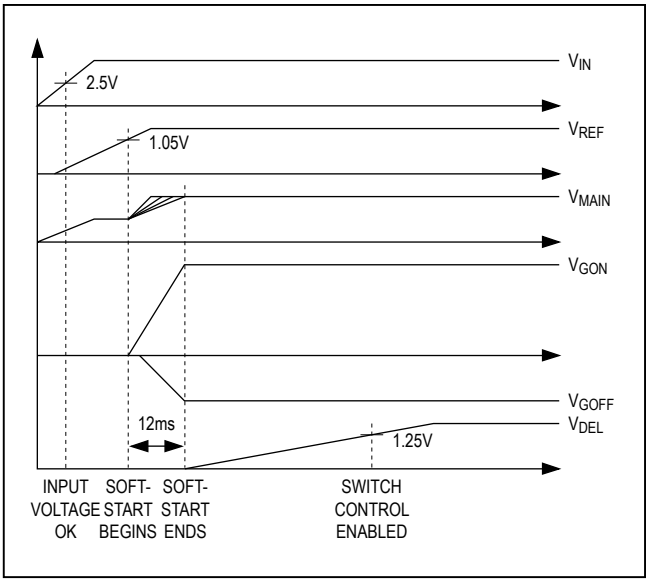

Figure 6. Power-Up Sequence

C_{DEL}. Once the capacitor voltage exceeds 1.25V (typ), the switch-control block is enabled as shown in Figure 6. After the switch-control block is enabled, COM can be connected to SRC or DRN through the internal p-channel switches, depending upon the state of CTL. Before startup and when IN is less than V_{UVLO}, DEL is internally connected to AGND to discharge C_{DEL}. Select C_{DEL} to set the delay time using the following equation:

$$C_{DEL} = DELAY_TIME \times \frac{5\mu A}{1.25V}$$

Switch-Control Block

The switch-control input (CTL) is not activated until all four of the following conditions are satisfied: the input voltage exceeds V_{UVLO}, the soft-start routine of all the regulators is complete, there is no fault condition detected, and V_{DEL} exceeds its turn-on threshold. Once activated and if CTL is high, the 5Ω internal p-channel switch (Q1) between COM and SRC turns on and the 30Ω p-channel switch (Q2) between DRN and COM turns off. If CTL is low, Q1 turns off and Q2 turns on.

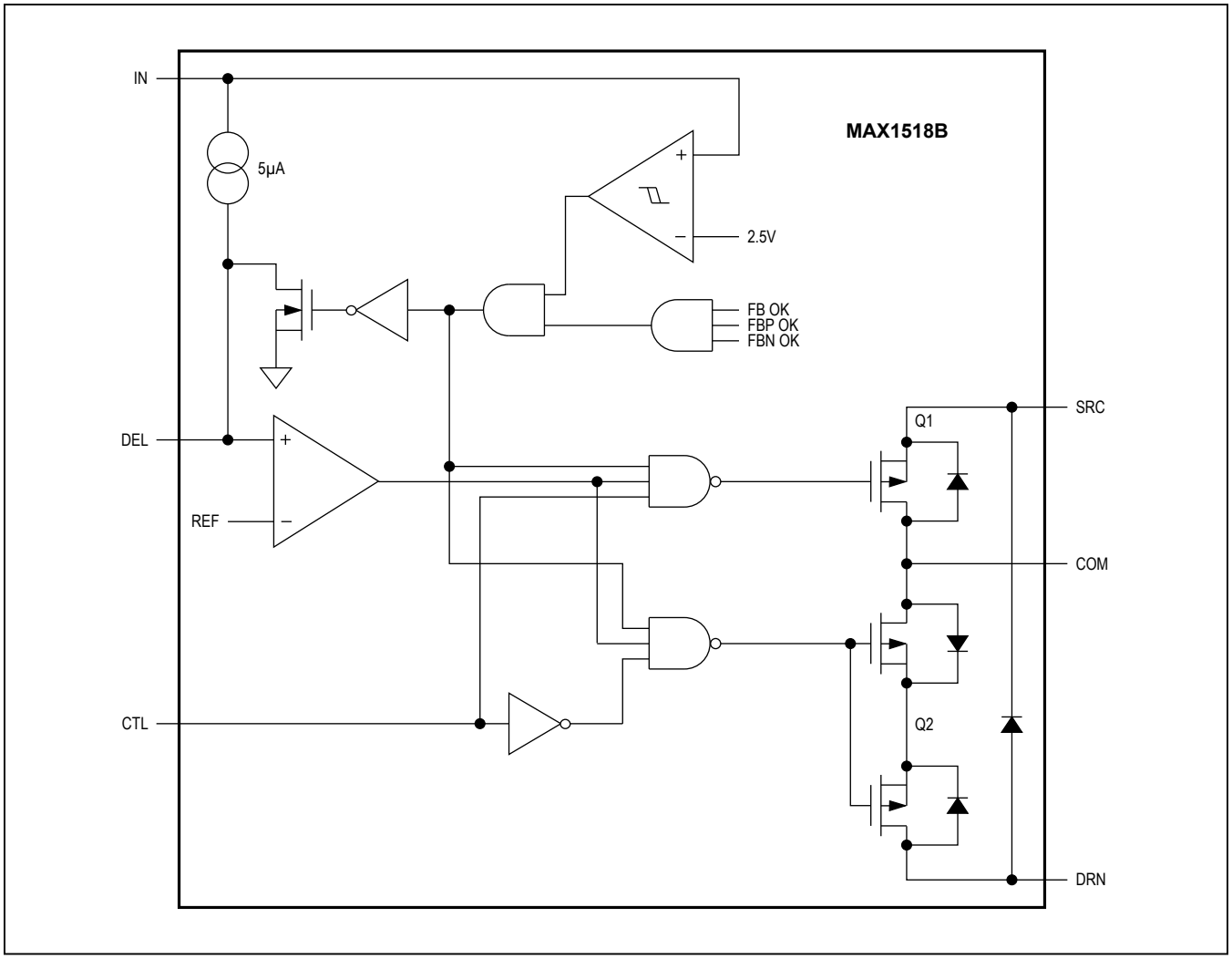

Figure 7. Switch-Control Block

Fault Protection

During steady-state operation, if the output of the main regulator or any of the linear-regulator outputs does not exceed its respective fault-detection threshold, the MAX1518B activates an internal fault timer. If any condition or combination of conditions indicates a continuous fault for the fault-timer duration (200ms typ), the MAX1518B sets the fault latch to shut down all the outputs except the reference. Once the fault condition is removed, cycle the input voltage (below the UVLO falling threshold) to clear the fault latch and reactivate the device. The fault-detection circuit is disabled during the soft-start time.

Thermal-Overload Protection

Thermal-overload protection prevents excessive power dissipation from overheating the MAX1518B. When the junction temperature exceeds T_J = +160°C, a thermal sensor immediately activates the fault protection, which shuts down all outputs except the reference, allowing the device to cool down. Once the device cools down by approximately 15°C, cycle the input voltage (below the UVLO falling threshold) to clear the fault latch and reactivate the device.

The thermal-overload protection protects the controller in the event of fault conditions. For continuous operation, do not exceed the absolute maximum junction temperature rating of T_J = +150°C.

Design Procedure

Main Step-Up Regulator

Inductor Selection

The minimum inductance value, peak current rating, and series resistance are factors to consider when selecting the inductor. These factors influence the converter's efficiency, maximum output load capability, transient-response time, and output voltage ripple. Size and cost are also important factors to consider.

The maximum output current, input voltage, output voltage, and switching frequency determine the inductor value. Very high inductance values minimize the current ripple and therefore reduce the peak current, which decreases core losses in the inductor and conduction losses in the entire power path. However, large inductor values also require more energy storage and more turns of wire, which increases size and can increase conduction losses in the inductor. Low inductance values decrease the size but increase the current ripple and peak current. Finding the best inductor involves choosing the best compromise between circuit efficiency, inductor size, and cost. The equations used here include a constant LIR, which is the ratio of the inductor peak-to-peak ripple current to the average DC inductor current at the full load current. The best trade-off between inductor size and circuit efficiency for step-up regulators generally has an LIR between 0.3 and 0.5. However, depending on the AC characteristics of the inductor core material and ratio of inductor resistance to other power-path resistances, the best LIR can shift up or down. If the inductor resistance is relatively high, more ripple can be accepted to reduce the number of turns required and increase the wire diameter. If the inductor resistance is relatively low, increasing inductance to lower the peak current can decrease losses throughout the power path. If extremely thin high-resistance inductors are used, as is common for LCD-panel applications, the best LIR can increase to between 0.5 and 1.0.

Once a physical inductor is chosen, higher and lower values of the inductor should be evaluated for efficiency improvements in typical operating regions.

Calculate the approximate inductor value using the typical input voltage (V_{IN}), the maximum output current ($I_{MAIN(MAX)}$), the expected efficiency (η_{TYP}) taken from an appropriate curve in the *Typical Operating Characteristics* section, and an estimate of LIR based on the above discussion:

$$L = \left(\frac{V_{IN}}{V_{MAIN}}\right)^2 \left(\frac{V_{MAIN} - V_{IN}}{I_{MAIN(MAX)} \times f_{OSC}}\right)\left(\frac{\eta_{TYP}}{LIR}\right)$$

Choose an available inductor value from an appropriate inductor family. Calculate the maximum DC input current at the minimum input voltage ($V_{IN(MIN)}$) using conservation of energy and the expected efficiency at that operating point (η_{MIN}) taken from the appropriate curve in the *Typical Operating Characteristics*:

$$I_{IN(DC,MAX)} = \frac{I_{MAIN(MAX)} \times V_{MAIN}}{V_{IN(MIN)} \times \eta_{MIN}}$$

Calculate the ripple current at that operating point and the peak current required for the inductor:

$$I_{RIPPLE} = \frac{V_{IN(MIN)} \times (V_{MAIN} - V_{IN(MIN)})}{L \times V_{MAIN} \times f_{OSC}}$$

$$I_{PEAK} = I_{IN(DC,MAX)} + \frac{I_{RIPPLE}}{2}$$

The inductor's saturation current rating and the MAX1518B's LX current limit (I_{LIM}) should exceed I_{PEAK}, and the inductor's DC current rating should exceed $I_{IN(DC,MAX)}$. For good efficiency, choose an inductor with less than 0.1Ω series resistance.

Considering the Typical Operating Circuit, the maximum load current ($I_{MAIN(MAX)}$) is 500mA with a 13V output and a typical input voltage of 5V. Choosing an LIR of 0.5 and estimating efficiency of 85% at this operating point:

$$L = \left(\frac{5V}{13V}\right)^2 \left(\frac{13V - 5V}{0.5A \times 1.2MHz}\right)\left(\frac{0.85}{0.5}\right) \approx 3.3\mu H$$

Using the circuit's minimum input voltage (4.5V) and estimating efficiency of 80% at that operating point:

$$I_{IN(DC,MAX)} = \frac{0.5A \times 13V}{4.5V \times 0.8} \approx 1.8A$$

The ripple current and the peak current are:

$$I_{RIPPLE} = \frac{4.5V \times (13V - 4.5V)}{3.3\mu H \times 1.2MHz} \approx 0.74A$$

$$I_{PEAK} = 1.8A + \frac{0.74A}{2} \approx 2.2A$$

Output-Capacitor Selection

The total output-voltage ripple has two components: the capacitive ripple caused by the charging and discharging of the output capacitance, and the ohmic ripple due to the capacitor's equivalent series resistance (ESR).

$$V_{RIPPLE} = V_{RIPPLE(C)} + V_{RIPPLE(ESR)}$$

$$V_{RIPPLE(C)} \approx \frac{I_{MAIN}}{C_{OUT}}\left(\frac{V_{MAIN} - V_{IN}}{V_{MAIN} f_{OSC}}\right), \text{ and}$$

$$V_{RIPPLE(ESR)} \approx I_{PEAK} R_{ESR(COUT)}$$

where I_{PEAK} is the peak inductor current (see the *Inductor Selection* section). For ceramic capacitors, the output voltage ripple is typically dominated by $V_{RIPPLE(C)}$. The voltage rating and temperature characteristics of the output capacitor must also be considered.

Input Capacitor Selection

The input capacitor (C_{IN}) reduces the current peaks drawn from the input supply and reduces noise injection into the IC. A 22µF ceramic capacitor is used in the Typical Applications Circuit (Figure 1) because of the high source impedance seen in typical lab setups. Actual applications usually have much lower source impedance since the step-up regulator often runs directly from the output of another regulated supply. Typically, C_{IN} can be reduced below the values used in the Typical Applications Circuit. Ensure a low-noise supply at IN by using adequate C_{IN}. Alternately, greater voltage variation can be tolerated on C_{IN} if IN is decoupled from C_{IN} using an RC lowpass filter (see R10 and C18 in Figure 1).

Rectifier Diode

The MAX1518B's high switching frequency demands a high-speed rectifier. Schottky diodes are recommended for most applications because of their fast recovery time and low forward voltage. In general, a 2A Schottky diode complements the internal MOSFET well.

Output-Voltage Selection

The output voltage of the main step-up regulator can be adjusted by connecting a resistive voltage-divider from the output (V_{MAIN}) to AGND with the center tap connected to FB (see Figure 1). Select R2 in the 10kΩ to 50kΩ range. Calculate R1 with the following equation:

$$R1 = R2 \times \left(\frac{V_{MAIN}}{V_{FB}} - 1\right)$$

where V_{FB}, the step-up regulator's feedback set point, is 1.236V. Place R1 and R2 close to the IC.

Generating Output Voltages > 13V

The maximum output voltage of the step-up regulator is 13V, which is limited by the absolute maximum rating of the internal power MOSFET. To achieve higher output voltages, an external n-channel MOSFET can be cascoded with the internal FET (Figure 8). Since the gate of the external FET is biased from the input supply, use a logic-level FET to ensure that the FET is fully enhanced at the minimum input voltage. The current rating of the FET needs to be higher than the IC's internal current limit.

Loop Compensation

Choose R_{COMP} to set the high-frequency integrator gain for fast transient response. Choose C_{COMP} to set the integrator zero to maintain loop stability.

For low-ESR output capacitors, use the following equations to obtain stable performance and good transient response:

$$R_{COMP} \approx \frac{315 \times V_{IN} \times V_{OUT} \times C_{OUT}}{L \times I_{MAIN(MAX)}}$$

$$C_{COMP} \approx \frac{V_{OUT} \times C_{OUT}}{10 \times I_{MAIN(MAX)} \times R_{COMP}}$$

To further optimize transient response, vary R_{COMP} in 20% steps and C_{COMP} in 50% steps while observing transient-response waveforms.

Charge Pumps

Selecting the Number of Charge-Pump Stages

For highest efficiency, always choose the lowest number of charge-pump stages that meet the output requirement. Figures 9 and 10 show the positive and negative charge-pump output voltages for a given V_{MAIN} for one-, two-, and three-stage charge pumps.

The number of positive charge-pump stages is given by:

$$n_{POS} = \frac{V_{GON} + V_{DROPOUT} - V_{MAIN}}{V_{MAIN} - 2 \times V_D}$$

where n_{POS} is the number of positive charge-pump stages, V_{GON} is the gate-on linear-regulator REG P output, V_{MAIN} is the main step-up regulator output, V_D is the forward-voltage drop of the charge-pump diode, and $V_{DROPOUT}$ is the dropout margin for the linear regulator. Use $V_{DROPOUT}$ = 0.3V.

The number of negative charge-pump stages is given by:

$$n_{NEG} = \frac{-V_{GOFF} + V_{DROPOUT}}{V_{MAIN} - 2 \times V_D}$$

where n_{NEG} is the number of negative charge-pump stages, V_{GOFF} is the gate-off linear-regulator REG N output, V_{MAIN} is the main step-up regulator output, V_D is

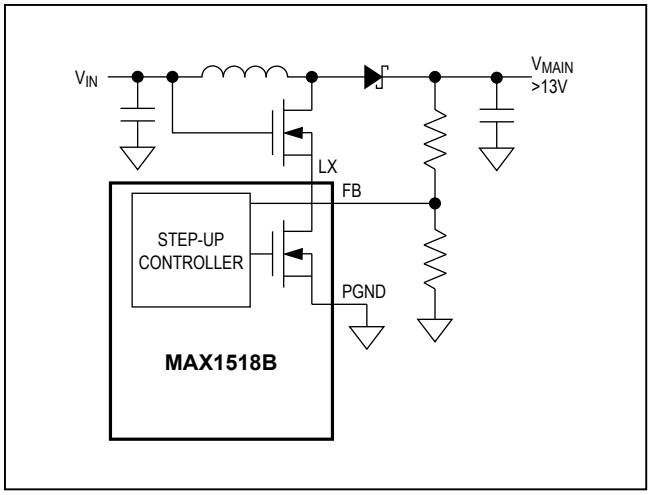

Figure 8. Operation with Output Voltages >13V Using Cascoded MOSFET

the forward-voltage drop of the charge-pump diode, and $V_{DROPOUT}$ is the dropout margin for the linear regulator. Use $V_{DROPOUT}$ = 0.3V.

The above equations are derived based on the assumption that the first stage of the positive charge pump is connected to V_{MAIN} and the first stage of the negative charge pump is connected to ground. Sometimes fractional stages are more desirable for better efficiency. This can be done by connecting the first stage to V_{IN} or another available supply. If the first charge-pump stage is powered from V_{IN}, then the above equations become:

$$n_{POS} = \frac{V_{GON} + V_{DROPOUT} + V_{IN}}{V_{MAIN} - 2 \times V_D}$$

$$n_{NEG} = \frac{-V_{GOFF} + V_{DROPOUT} + V_{IN}}{V_{MAIN} - 2 \times V_D}$$

Flying Capacitors

Increasing the flying-capacitor (C_X) value lowers the effective source impedance and increases the output-current capability. Increasing the capacitance indefinitely has a negligible effect on output-current capability because the internal switch resistance and the diode impedance place a lower limit on the source impedance. A 0.1µF ceramic capacitor works well in most low-current pplications. The flying capacitor's voltage rating must exceed the following:

$$V_{CX} > n \times V_{MAIN}$$

where n is the stage number in which the flying capacitor appears, and V_{MAIN} is the output voltage of the main step-up regulator.

Charge-Pump Output Capacitor

Increasing the output capacitance or decreasing the ESR reduces the output ripple voltage and the peak-to-peak transient voltage. With ceramic capacitors, the output voltage ripple is dominated by the capacitance value. Use the following equation to approximate the required capacitor value:

$$C_{OUT_CP} \geq \frac{I_{LOAD_CP}}{2f_{OSC}\, V_{RIPPLE_CP}}$$

where C_{OUT_CP} is the output capacitor of the charge pump, I_{LOAD_CP} is the load current of the charge pump, and V_{RIPPLE_CP} is the peak-to-peak value of the output ripple.

Charge-Pump Rectifier Diodes

Use low-cost silicon switching diodes with a current rating equal to or greater than two times the average charge-pump input current. If it helps avoid an extra stage, some or all of the diodes can be replaced with Schottky diodes with an equivalent current rating.

Linear-Regulator Controllers

Output-Voltage Selection

Adjust the gate-on linear-regulator (REG P) output voltage by connecting a resistive voltage-divider from the REG P output to AGND with the center tap connected to FBP (Figure 1). Select the lower resistor of the divider R5 in the range of 10kΩ to 30kΩ. Calculate the upper resistor R4 with the following equation:

$$R4 = R5 \times \left(\frac{V_{GON}}{V_{FBP}} - 1\right)$$

where V_{FBP} = 1.25V (typ).

Adjust the gate-off linear-regulator REG N output voltage by connecting a resistive voltage-divider from V_{GOFF} to REF with the center tap connected to FBN (Figure 1). Select R8 in the range of 20kΩ to 50kΩ. Calculate R7 with the following equation:

$$R7 = R8 \times \frac{V_{FBN} - V_{GOFF}}{V_{REF} - V_{FBN}}$$

where V_{FBN} = 250mV, V_{REF} = 1.25V. Note that REF can only source up to 50µA; using a resistor less than 20kΩ for R8 results in higher bias current than REF can supply.

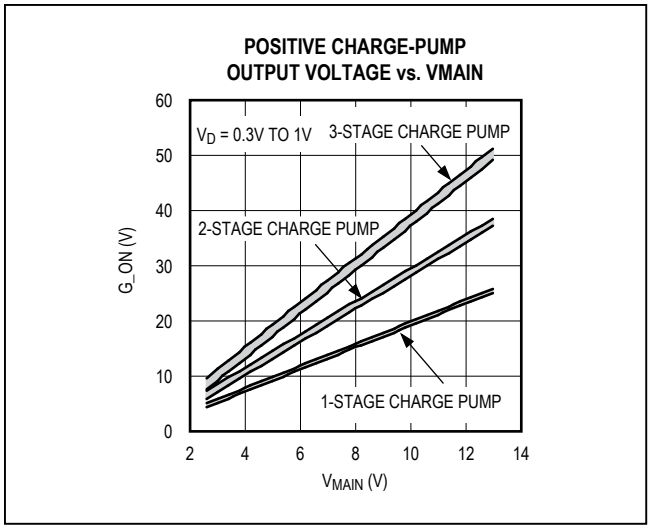

Figure 9. Positive Charge-Pump Output Voltage vs. V_{MAIN}

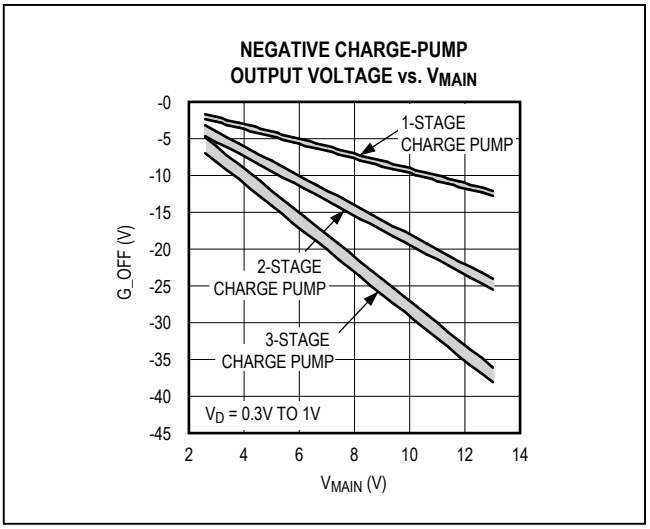

Figure 10. Negative Charge-Pump Output Voltage vs. V_{MAIN}

Pass-Transistor Selection

The pass transistor must meet specifications for current gain (h_{FE}), input capacitance, collector-emitter saturation voltage and power dissipation. The transistor's current gain limits the guaranteed maximum output current to:

$$I_{LOAD(MAX)} = \left(I_{DRV} - \frac{V_{BE}}{R_{BE}}\right) \times h_{FE(MIN)}$$

where I_{DRV} is the minimum guaranteed base-drive current, V_{BE} is the transistor's base-to-emitter forward voltage drop, and R_{BE} is the pullup resistor connected between the transistor's base and emitter. Furthermore, the transistor's current gain increases the linear regulator's DC loop gain (see the *Stability Requirements* section), so excessive gain destabilizes the output. Therefore, transistors with current gain over 100 at the maximum output current can be difficult to stabilize and are not recommended unless the high gain is needed to meet the load-current requirements.

The transistor's saturation voltage at the maximum output current determines the minimum input-to-output voltage differential that the linear regulator can support. Also, the package's power dissipation limits the usable maximum input-to-output voltage differential. The maximum power-dissipation capability of the transistor's package and mounting must exceed the actual power dissipated in the device. The power dissipated equals the maximum load current ($I_{LOAD(MAX)_LR}$) multiplied by the maximum input-to-output voltage differential:

$$P = I_{LOAD(MAX)_LR} \times (V_{IN(MAX)_LR} - V_{OUT_LR})$$

where $V_{IN(MAX)_LR}$ is the maximum input voltage of the linear regulator, and V_{OUT_LR} is the output voltage of the linear regulator.

Stability Requirements

The MAX1518B linear-regulator controllers use an internal transconductance amplifier to drive an external pass transistor. The transconductance amplifier, the pass transistor, the base-emitter resistor, and the output capacitor determine the loop stability. The following applies to both linear-regulator controllers in the MAX1518B.

The transconductance amplifier regulates the output voltage by controlling the pass transistor's base current. The total DC loop gain is approximately:

$$A_{V_LR} \cong \left(\frac{10}{V_T}\right) \times \left[1 + \left(\frac{I_{BIAS} \times h_{FE}}{I_{LOAD_LR}}\right)\right] \times V_{REF}$$

where V_T is 26mV at room temperature, and IBIAS is the current through the base-to-emitter resistor (R_{BE}). For the

MAX1518B, the bias currents for both the gate-on and gate-off linear-regulator controllers are 0.1mA. Therefore, the base-to-emitter resistor for both linear regulators should be chosen to set 0.1mA bias current:

$$R_{BE} = \frac{V_{BE}}{0.1mA} = \frac{0.7V}{0.1mA} \approx 6.8k\Omega$$

The output capacitor and the load resistance create the dominant pole in the system. However, the internal amplifier delay, pass transistor's input capacitance, and the stray capacitance at the feedback node create additional poles in the system, and the output capacitor's ESR generates a zero. For proper operation, use the following equations to verify the linear regulator is properly compensated:

1) First, determine the dominant pole set by the linear regulator's output capacitor and the load resistor:

$$f_{POLE_LR} = \frac{I_{LOAD(MAX)_LR}}{2\pi \times C_{OUT_LR} \times V_{OUT_LR}}$$

The unity-gain crossover of the linear regulator is:

$$f_{CROSSOVER} = A_{V_LR} \times f_{POLE_LR}$$

2) The pole created by the internal amplifier delay is approximately 1MHz:

$$f_{POLE_AMP} = 1MHz$$

3) Next, calculate the pole set by the transistor's input capacitance, the transistor's input resistance, and the base-to-emitter pullup resistor:

$$f_{POLE_IN} = \frac{1}{2\pi \times C_{IN} \times (R_{BE} \parallel R_{IN})}$$

$$\text{where } C_{IN} = \frac{g_M}{2\pi f_T},\ R_{IN} = \frac{h_{FE}}{g_m},$$

g_m is the transconductance of the pass transistor, and f_T is the transition frequency. Both parameters can be found in the transistor's data sheet. Because R_{BE} is much greater than R_{IN}, the above equation can be simplified:

$$f_{POLE_IN} = \frac{1}{2\pi \times C_{IN} \times R_{IN}}$$

Substituting for C_{IN} and R_{IN} yields:

$$f_{POLE_IN} = \frac{f_T}{h_{FE}}$$

4) Next, calculate the pole set by the linear regulator's feedback resistance and the capacitance between FB_ and AGND (including stray capacitance):

$$f_{POLE_FB} = \frac{1}{2\pi \times C_{FB} \times (R_{UPPER} \parallel R_{LOWER})}$$

where C_{FB} is the capacitance between FB_ and AGND, RUPPER is the upper resistor of the linear regulator's feedback divider, and R_{LOWER} is the lower resistor of the divider.

5) Next, calculate the zero caused by the output capacitor's ESR:

$$f_{POLE_ESR} = \frac{1}{2\pi \times C_{OUT_LR} \times R_{ESR}}$$

where R_{ESR} is the equivalent series resistance of C_{OUT_LR}.

To ensure stability, choose C_{OUT_LR} large enough so the crossover occurs well before the poles and zero calculated in steps 2 to 5. The poles in steps 3 and 4 generally occur at several megahertz, and using ceramic capacitors ensures the ESR zero occurs at several megahertz as well. Placing the crossover below 500kHz is sufficient to avoid the amplifier-delay pole and generally works well, unless unusual component choices or extra capacitances move one of the other poles or the zero below 1MHz.

Applications Information

Power Dissipation

An IC's maximum power dissipation depends on the thermal resistance from the die to the ambient environment and the ambient temperature. The thermal resistance depends on the IC package, PCB copper area, other thermal mass, and airflow.

The MAX1518B, with its exposed backside pad soldered to $1in^2$ of PCB copper, can dissipate approximately 1.7W into +70°C still air. More PCB, cooler ambient air, and more airflow increase the possible dissipation, while less copper or warmer air decreases the IC's dissipation capability. The major components of power dissipation are the power dissipated in the step-up regulator and the power dissipated by the operational amplifiers.

Step-Up Regulator

The largest portions of power dissipation in the step-up regulator are the internal MOSFET, the inductor, and the output diode. If the step-up regulator has 90% efficiency, approximately 3% to 5% of the power is lost in the internal MOSFET, approximately 3% to 4% in the inductor, and approximately 1% in the output diode. The remaining 1% to 3% is distributed among the input and output capacitors and the PCB traces. If the input power is about 5W, the power lost in the internal MOSFET is approximately 150mW to 250mW.

Operational Amplifier

The power dissipated in the operational amplifiers depends on their output current, the output voltage, and the supply voltage:

$$PD_{SOURCE} = I_{OUT_(SOURCE)} \times (V_{SUP} - V_{OUT_})$$

$$PD_{SINK} = I_{OUT_(SINK)} \times V_{OUT_}$$

where $I_{OUT_(SOURCE)}$ is the output current sourced by the operational amplifier, and $I_{OUT_(SINK)}$ is the output current that the operational amplifier sinks.

In a typical case where the supply voltage is 13V and the output voltage is 6V with an output source current of 30mA, the power dissipated is 180mW.

PCB Layout and Grounding

Careful PCB layout is important for proper operation. Use the following guidelines for good PCB layout:

- Minimize the area of high-current loops by placing the inductor, the output diode, and the output capacitors near the input capacitors and near the LX and PGND pins. The high-current input loop goes from the positive terminal of the input capacitor to the inductor, to the IC's LX pin, out of PGND, and to the input capacitor's negative terminal. The high-current output loop is from the positive terminal of the input capacitor to the inductor, to the output diode (D1), and to the positive terminal of the output capacitors, reconnecting between the output capacitor and input capacitor ground terminals. Connect these loop components with short, wide connections. Avoid using vias in the high-current paths. If vias are unavoidable, use many vias in parallel to reduce resistance and inductance.
- Create a power-ground island (PGND) consisting of the input and output capacitor grounds, PGND pin, and any charge-pump components. Connect all of these together with short, wide traces or a small ground plane. Maximizing the width of the powerground traces improves efficiency and reduces output voltage ripple and noise spikes. Create an analog ground plane (AGND) consisting of the AGND pin, all the feedback-divider ground connections, the operational-amplifier divider ground connections, the COMP and DEL capacitor ground connections, and the device's exposed backside pad. Connect the AGND and PGND islands by connecting the PGND pin directly to the exposed backside pad. Make no other connections between these separate ground planes.
- Place all feedback voltage-divider resistors as close to their respective feedback pins as possible. The divider's center trace should be kept short. Placing the resistors far away causes their FB traces to become antennas that can pick up switching noise. Take care to avoid running any feedback trace near LX or the switching nodes in the charge pumps.
- Place the IN pin and REF pin bypass capacitors as close to the device as possible. The ground connection of the IN bypass capacitor should be connected directly to the AGND pin with a wide trace.
- Minimize the length and maximize the width of the traces between the output capacitors and the load for best transient responses.
- Minimize the size of the LX node while keeping it wide and short. Keep the LX node away from feedback nodes (FB, FBP, and FBN) and analog ground. Use DC traces to shield if necessary.

Refer to the MAX1518B evaluation kit for an example of proper PCB layout.

Pin Configuration

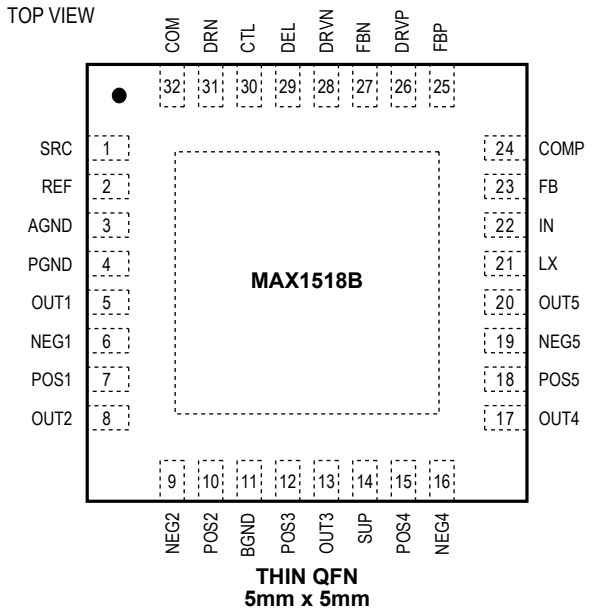

Chip Information

TRANSISTOR COUNT: 4608

Package Information

For the latest package outline information and land patterns (footprints), go to **www.maximintegrated.com/packages**. Note that a "+", "#", or "-" in the package code indicates RoHS status only. Package drawings may show a different suffix character, but the drawing pertains to the package regardless of RoHS status.

PACKAGE TYPE	PACKAGE CODE	OUTLINE NO.	LAND PATTERN NO.
32 TQFN	T-3255-4	21-0140	90-0012

Revision History

REVISION NUMBER	REVISION DATE	DESCRIPTION	PAGES CHANGED
0	2/09	Initial release	—
1	11/14	No /V OPNs; deleted “Automotive Displays” from *Applications* section; updated *Package Information* and added *Revision History* table	1, 24, 25

For pricing, delivery, and ordering information, please contact Maxim Direct at 1-888-629-4642, or visit Maxim Integrated’s website at www.maximintegrated.com.

Maxim Integrated cannot assume responsibility for use of any circuitry other than circuitry entirely embodied in a Maxim Integrated product. No circuit patent licenses are implied. Maxim Integrated reserves the right to change the circuitry and specifications without notice at any time. The parametric values (min and max limits) shown in the Electrical Characteristics table are guaranteed. Other parametric values quoted in this data sheet are provided for guidance.

Maxim Integrated and the Maxim Integrated logo are trademarks of Maxim Integrated Products, Inc. © 2014 Maxim Integrated Products, Inc.

OCEAN CHIPS
Океан Электроники
Поставка электронных компонентов

Компания «Океан Электроники» предлагает заключение долгосрочных отношений при поставках импортных электронных компонентов на взаимовыгодных условиях!

Наши преимущества:

- Поставка оригинальных импортных электронных компонентов напрямую с производств Америки, Европы и Азии, а так же с крупнейших складов мира;
- Широкая линейка поставок активных и пассивных импортных электронных компонентов (более 30 млн. наименований);
- Поставка сложных, дефицитных, либо снятых с производства позиций;
- Оперативные сроки поставки под заказ (от 5 рабочих дней);
- Экспресс доставка в любую точку России;
- Помощь Конструкторского Отдела и консультации квалифицированных инженеров;
- Техническая поддержка проекта, помощь в подборе аналогов, поставка прототипов;
- Поставка электронных компонентов под контролем ВП;
- Система менеджмента качества сертифицирована по Международному стандарту ISO 9001;
- При необходимости вся продукция военного и аэрокосмического назначения проходит испытания и сертификацию в лаборатории (по согласованию с заказчиком);
- Поставка специализированных компонентов военного и аэрокосмического уровня качества (Xilinx, Altera, Analog Devices, Intersil, Interpoint, Microsemi, Actel, Aeroflex, Peregrine, VPT, Syfer, Eurofarad, Texas Instruments, MS Kennedy, Miteq, Cobham, E2V, MA-COM, Hittite, Mini-Circuits, General Dynamics и др.);

Компания «Океан Электроники» является официальным дистрибьютором и эксклюзивным представителем в России одного из крупнейших производителей разъемов военного и аэрокосмического назначения **«JONHON»**, а так же официальным дистрибьютором и эксклюзивным представителем в России производителя высокотехнологичных и надежных решений для передачи СВЧ сигналов **«FORSTAR»**.

AVIC JONHON

«JONHON» (основан в 1970 г.)

Разъемы специального, военного и аэрокосмического назначения:

(Применяются в военной, авиационной, аэрокосмической, морской, железнодорожной, горно- и нефтедобывающей отраслях промышленности)

«FORSTAR» (основан в 1998 г.)

ВЧ соединители, коаксиальные кабели, кабельные сборки и микроволновые компоненты:

(Применяются в телекоммуникациях гражданского и специального назначения, в средствах связи, РЛС, а так же военной, авиационной и аэрокосмической отраслях промышленности).

FORSTAR®

Телефон: 8 (812) 309-75-97 (многоканальный)
Факс: 8 (812) 320-03-32
Электронная почта: ocean@oceanchips.ru
Web: http://oceanchips.ru/
Адрес: 198099, г. Санкт-Петербург, ул. Калинина, д. 2, корп. 4, лит. А