- **Members of the Texas Instruments *SCOPE*™ Family of Testability Products**
- **Compatible With the IEEE Standard 1149.1-1990 (JTAG) Test Access Port and Boundary-Scan Architecture**
- **Functionally Equivalent to ’F652 and ’ABT652 in the Normal-Function Mode**
- ***SCOPE*™ Instruction Set**
  - **IEEE Standard 1149.1-1990 Required Instructions, Optional INTEST, CLAMP, and HIGHZ**
  - **Parallel-Signature Analysis at Inputs With Masking Option**
  - **Pseudo-Random Pattern Generation From Outputs**
  - **Sample Inputs/Toggle Outputs**
  - **Binary Count From Outputs**
  - **Even-Parity Opcodes**
- **Two Boundary-Scan Cells Per I/O for Greater Flexibility**
- **State-of-the-Art *EPIC*-II*B*™ BiCMOS Design Significantly Reduces Power Dissipation**
- **Package Options Include Shrink Small-Outline (DL) and Plastic Small-Outline (DW) Packages, Ceramic Chip Carriers (FK), and Standard Ceramic DIPs (JT)**

SN54ABT8652 . . . JT PACKAGE
SN74ABT8652 . . . DL OR DW PACKAGE
(TOP VIEW)

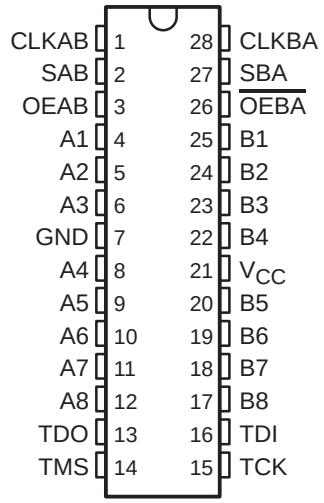

SN54ABT8652 . . . FK PACKAGE
(TOP VIEW)

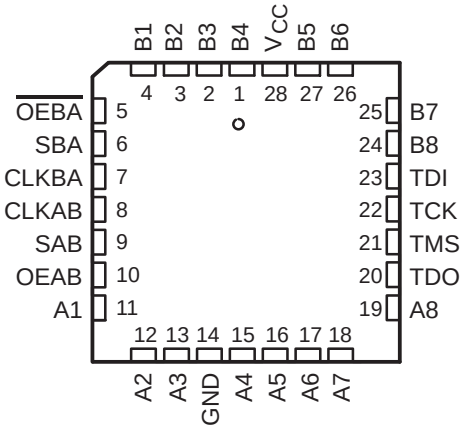

description

The ’ABT8652 scan test devices with octal bus transceivers and registers are members of the Texas Instruments SCOPE™ testability integrated-circuit family. This family of devices supports IEEE Standard 1149.1-1990 boundary scan to facilitate testing of complex circuit-board assemblies. Scan access to the test circuitry is accomplished via the 4-wire test access port (TAP) interface.

In the normal mode, these devices are functionally equivalent to the ’F652 and ’ABT652 octal bus transceivers and registers. The test circuitry can be activated by the TAP to take snapshot samples of the data appearing at the device pins or to perform a self test on the boundary-test cells. Activating the TAP in normal mode does not affect the functional operation of the SCOPE™ octal bus transceivers and registers.

Please be aware that an important notice concerning availability, standard warranty, and use in critical applications of Texas Instruments semiconductor products and disclaimers thereto appears at the end of this data sheet.

SCOPE and EPIC-IIB are trademarks of Texas Instruments Incorporated.

PRODUCTION DATA information is current as of publication date. Products conform to specifications per the terms of Texas Instruments standard warranty. Production processing does not necessarily include testing of all parameters.

Copyright © 1996, Texas Instruments Incorporated

On products compliant to MIL-PRF-38535, all parameters are tested unless otherwise noted. On all other products, production processing does not necessarily include testing of all parameters.

description (continued)

Data flow in each direction is controlled by clock (CLKAB and CLKBA), select (SAB and SBA), and output-enable (OEAB and $\overline{\text{OEBA}}$) inputs. For A-to-B data flow, data on the A bus is clocked into the associated registers on the low-to-high transition of CLKAB. When SAB is low, real-time A data is selected for presentation to the B bus (transparent mode). When SAB is high, stored A data is selected for presentation to the B bus (registered mode). When OEAB is high, the B outputs are active. When OEAB is low, the B outputs are in the high-impedance state. Control for B-to-A data flow is similar to that for A-to-B data flow but uses CLKBA, SBA, and $\overline{\text{OEBA}}$ inputs. Since the $\overline{\text{OEBA}}$ input is active low, the A outputs are active when $\overline{\text{OEBA}}$ is low and are in the high-impedance state when $\overline{\text{OEBA}}$ is high. Figure 1 shows the four fundamental bus-management functions that can be performed with the ’ABT8652.

In the test mode, the normal operation of the SCOPE™ bus transceivers and registers is inhibited and the test circuitry is enabled to observe and control the I/O boundary of the device. When enabled, the test circuitry performs boundary-scan test operations as described in IEEE Standard 1149.1-1990.

Four dedicated test pins control the operation of the test circuitry: test data input (TDI), test data output (TDO), test mode select (TMS), and test clock (TCK). Additionally, the test circuitry performs other testing functions such as parallel-signature analysis (PSA) on data inputs and pseudo-random pattern generation (PRPG) from data outputs. All testing and scan operations are synchronized to the TAP interface.

The SN54ABT8652 is characterized for operation over the full military temperature range of –55°C to 125°C. The SN74ABT8652 is characterized for operation from –40°C to 85°C.

FUNCTION TABLE

INPUTS						DATA I/O		OPERATION OR FUNCTION
OEAB	$\overline{\text{OEBA}}$	CLKAB	CLKBA	SAB	SBA	A1–A8	B1–B8	
L	H	X	X	X	X	Input disabled	Input disabled	Isolation
L	H	↑	↑	X	X	Input	Input	Store A and B data
X	H	↑	L	X	X	Input	Unspecified†	Store A, hold B
H	H	↑	↑	X‡	X	Input	Output	Store A in both registers
L	X	L	↑	X	X	Unspecified†	Input	Hold A, store B
L	L	↑	↑	X	X‡	Output	Input	Store B in both registers
L	L	X	X	X	L	Output	Input	Real-time B data to A bus
L	L	X	X	X	H	Output	Input	Stored B data to A bus
H	H	X	X	L	X	Input	Output	Real-time A data to B bus
H	H	X	X	H	X	Input	Output	Stored A data to B bus
H	L	L	L	H	H	Output	Output	Stored A data to B bus and stored B data to A bus

† The data-output functions can be enabled or disabled by a variety of level combinations at OEAB or $\overline{\text{OEBA}}$. Data-input functions are always enabled; i.e., data at the bus terminals is stored on every low-to-high transition of the clock inputs.
‡ Select control = L: clocks can occur simultaneously.
Select control = H: clocks must be staggered in order to load both registers.

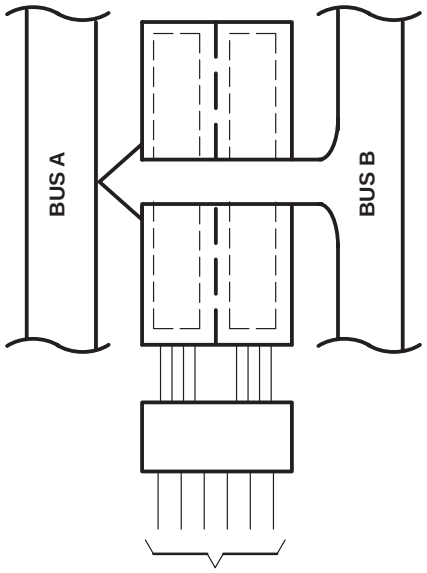

3	26	1	28	2	27
OEAB	$\overline{\text{OEBA}}$	CLKAB	CLKBA	SAB	SBA
L	L	X	X	X	L

REAL-TIME TRANSFER
BUS B TO BUS A

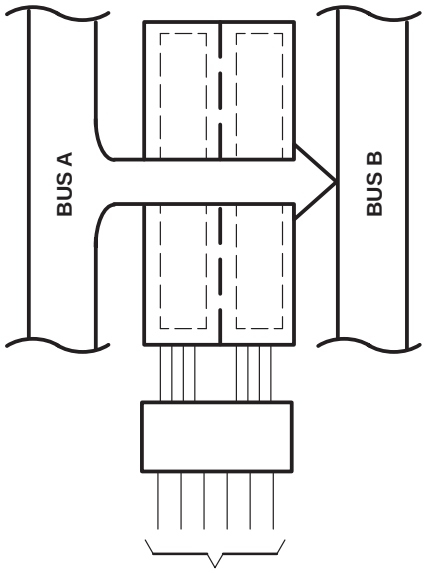

3	26	1	28	2	27
OEAB	$\overline{\text{OEBA}}$	CLKAB	CLKBA	SAB	SBA
H	H	X	X	L	X

REAL-TIME TRANSFER
BUS A TO BUS B

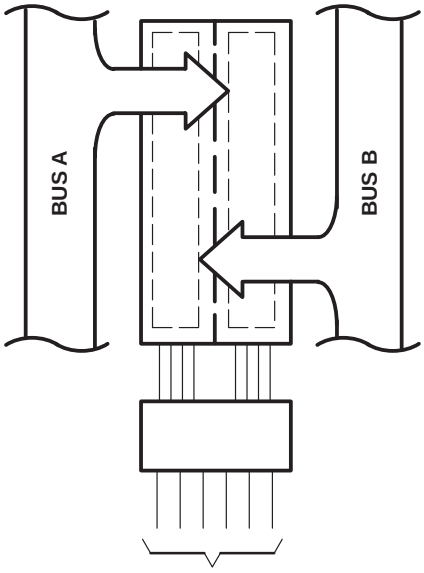

3	26	1	28	2	27
OEAB	$\overline{\text{OEBA}}$	CLKAB	CLKBA	SAB	SBA
X	H	↑	X	X	X
L	X	X	↑	X	X
L	H	↑	↑	X	X

STORAGE FROM
A, B, OR A AND B

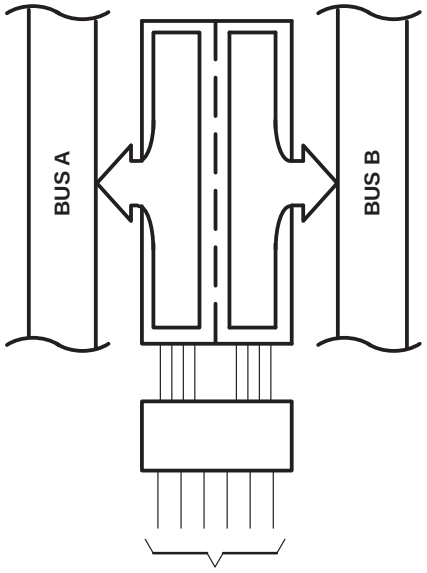

3	26	1	28	2	27
OEAB	$\overline{\text{OEBA}}$	CLKAB	CLKBA	SAB	SBA
H	L	X	X	H	H

TRANSFER STORED DATA
TO A AND/OR B

Pin numbers shown are for the DL, DW, and JT packages.

Figure 1. Bus-Management Functions

functional block diagram

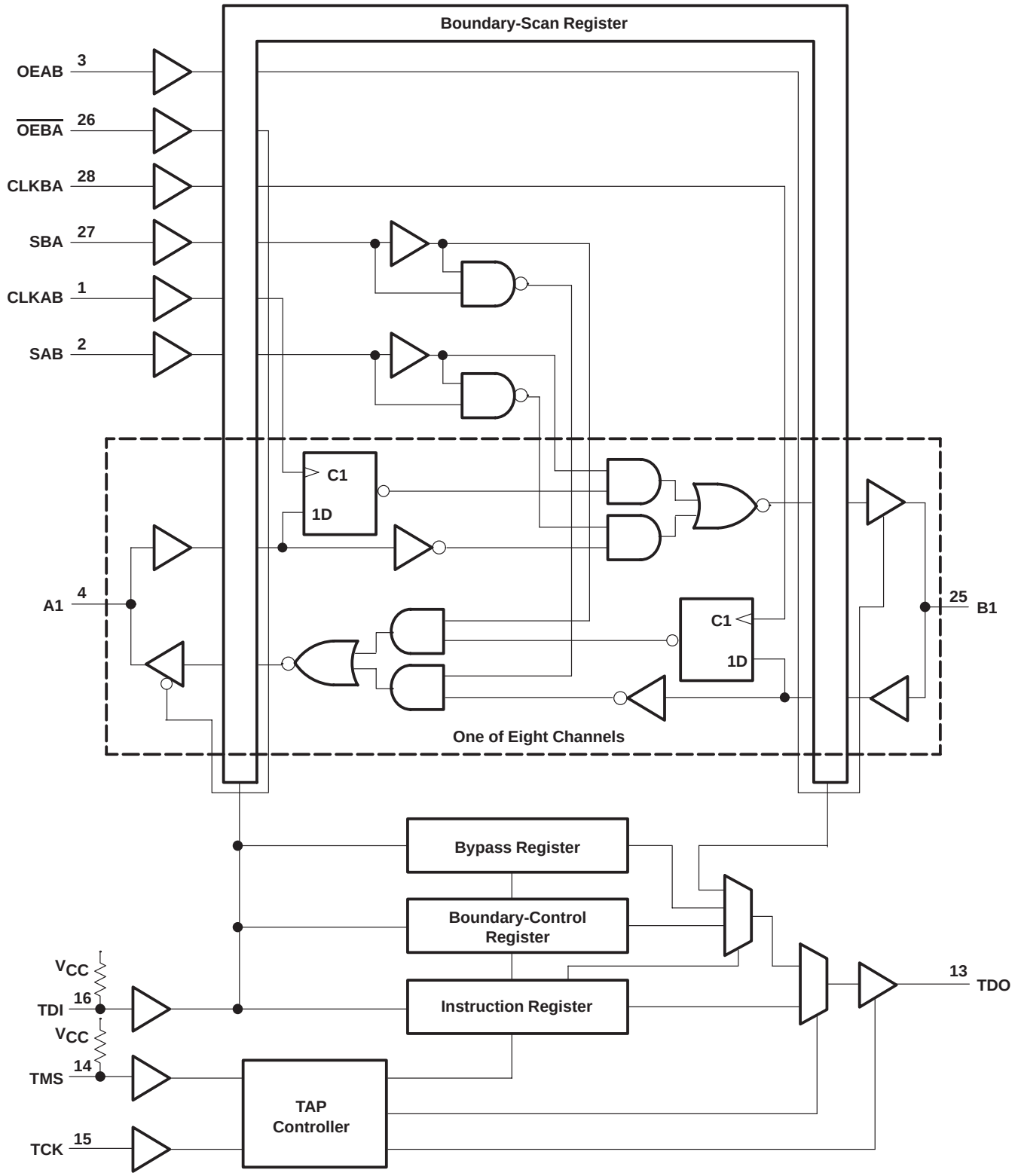

Pin numbers shown are for the DL, DW, and JT packages.

Terminal Functions

TERMINAL NAME	DESCRIPTION
A1–A8	Normal-function A-bus I/O ports. See function table for normal-mode logic.
B1–B8	Normal-function B-bus I/O ports. See function table for normal-mode logic.
CLKAB, CLKBA	Normal-function clock inputs. See function table for normal-mode logic.
GND	Ground
OEAB, $\overline{\text{OEBA}}$	Normal-function output-enable inputs. See function table for normal-mode logic.
SAB, SBA	Normal-function select inputs. See function table for normal-mode logic.
TCK	Test clock. One of four terminals required by IEEE Standard 1149.1-1990. Test operations of the device are synchronous to TCK. Data is captured on the rising edge of TCK, and outputs change on the falling edge of TCK.
TDI	Test data input. One of four terminals required by IEEE Standard 1149.1-1990. TDI is the serial input for shifting data through the instruction register or selected data register. An internal pullup forces TDI to a high level if left unconnected.
TDO	Test data output. One of four terminals required by IEEE Standard 1149.1-1990. TDO is the serial output for shifting data through the instruction register or selected data register.
TMS	Test mode select. One of four terminals required by IEEE Standard 1149.1-1990. TMS directs the device through its TAP controller states. An internal pullup forces TMS to a high level if left unconnected.
V_{CC}	Supply voltage

test architecture

Serial-test information is conveyed by means of a 4-wire test bus or TAP, that conforms to IEEE Standard 1149.1-1990. Test instructions, test data, and test control signals all are passed along this serial-test bus. The TAP controller monitors two signals from the test bus, TCK and TMS. The TAP controller extracts the synchronization (TCK) and state control (TMS) signals from the test bus and generates the appropriate on-chip control signals for the test structures in the device. Figure 2 shows the TAP-controller state diagram.

The TAP controller is fully synchronous to the TCK signal. Input data is captured on the rising edge of TCK and output data changes on the falling edge of TCK. This scheme ensures data to be captured is valid for fully one-half of the TCK cycle.

The functional block diagram shows the IEEE Standard 1149.1-1990 4-wire test bus and boundary-scan architecture and the relationship among the test bus, the TAP controller, and the test registers. As shown, the device contains an 8-bit instruction register and three test-data registers: a 38-bit boundary-scan register, an 11-bit boundary-control register, and a 1-bit bypass register.

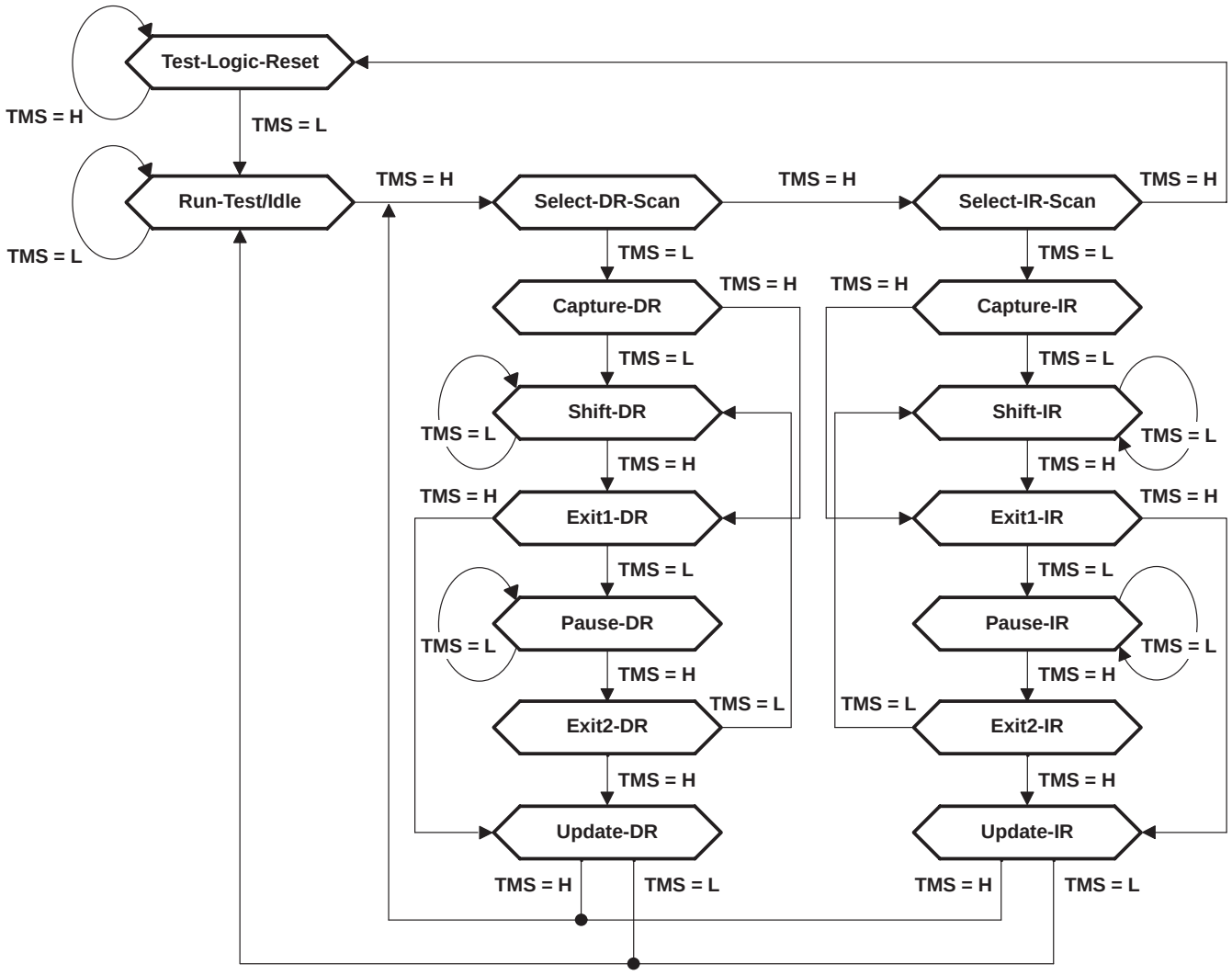

Figure 2. TAP-Controller State Diagram

state diagram description

The TAP controller is a synchronous finite state machine that provides test control signals throughout the device. The state diagram shown in Figure 2 is in accordance with IEEE Standard 1149.1-1990. The TAP controller proceeds through its states based on the level of TMS at the rising edge of TCK.

As shown, the TAP controller consists of 16 states. There are six stable states (indicated by a looping arrow in the state diagram) and ten unstable states. A stable state is a state the TAP controller can retain for consecutive TCK cycles. Any state that does not meet this criterion is an unstable state.

There are two main paths through the state diagram: one to access and control the selected data register and one to access and control the instruction register. Only one register can be accessed at a time.

Test-Logic-Reset

The device powers up in the Test-Logic-Reset state. In the stable Test-Logic-Reset state, the test logic is reset and is disabled so that the normal logic function of the device is performed. The instruction register is reset to an opcode that selects the optional IDCODE instruction, if supported, or the BYPASS instruction. Certain data registers also can be reset to their power-up values.

The state machine is constructed such that the TAP controller returns to the Test-Logic-Reset state in no more than five TCK cycles if TMS is left high. TMS has an internal pullup resistor that forces it high if left unconnected or if a board defect causes it to be open circuited.

For the ’ABT8652, the instruction register is reset to the binary value 11111111, which selects the BYPASS instruction. Each bit in the boundary-scan register is reset to logic 0 except bit 36, which is reset to logic 1. The boundary-control register is reset to the binary value 00000000010, which selects the PSA test operation with no input masking.

Run-Test/Idle

The TAP controller must pass through the Run-Test/Idle state (from Test-Logic-Reset) before executing any test operations. The Run-Test/Idle state also can be entered following data-register or instruction-register scans. Run-Test/Idle is a stable state in which the test logic can be actively running a test or can be idle. The test operations selected by the boundary-control register are performed while the TAP controller is in the Run-Test/Idle state.

Select-DR-Scan, Select-IR-Scan

No specific function is performed in the Select-DR-Scan and Select-IR-Scan states, and the TAP controller exits either of these states on the next TCK cycle. These states allow the selection of either data-register scan or instruction-register scan.

Capture-DR

When a data-register scan is selected, the TAP controller must pass through the Capture-DR state. In the Capture-DR state, the selected data register can capture a data value as specified by the current instruction. Such capture operations occur on the rising edge of TCK, upon which the TAP controller exits the Capture-DR state.

Shift-DR

Upon entry to the Shift-DR state, the data register is placed in the scan path between TDI and TDO and, on the first falling edge of TCK, TDO goes from the high-impedance state to an active state. TDO enables to the logic level present in the least-significant bit of the selected data register.

While in the stable Shift-DR state, data is serially shifted through the selected data register on each TCK cycle. The first shift occurs on the first rising edge of TCK after entry to the Shift-DR state (i.e., no shifting occurs during the TCK cycle in which the TAP controller changes from Capture-DR to Shift-DR or from Exit2-DR to Shift-DR). The last shift occurs on the rising edge of TCK, upon which the TAP controller exits the Shift-DR state.

Exit1-DR, Exit2-DR

The Exit1-DR and Exit2-DR states are temporary states that end a data-register scan. It is possible to return to the Shift-DR state from either Exit1-DR or Exit2-DR without recapturing the data register. On the first falling edge of TCK after entry to Exit1-DR, TDO goes from the active state to the high-impedance state.

Pause-DR

No specific function is performed in the stable Pause-DR state, in which the TAP controller can remain indefinitely. The Pause-DR state suspends and resumes data-register scan operations without loss of data.

Update-DR

If the current instruction calls for the selected data register to be updated with current data, then such update occurs on the falling edge of TCK, following entry to the Update-DR state.

Capture-IR

When an instruction-register scan is selected, the TAP controller must pass through the Capture-IR state. In the Capture-IR state, the instruction register captures its current status value. This capture operation occurs on the rising edge of TCK, upon which the TAP controller exits the Capture-IR state. For the ’ABT8652, the status value loaded in the Capture-IR state is the fixed binary value 10000001.

Shift-IR

Upon entry to the Shift-IR state, the instruction register is placed in the scan path between TDI and TDO and, on the first falling edge of TCK, TDO goes from the high-impedance state to an active state. TDO enables to the logic level present in the least-significant bit of the instruction register.

While in the stable Shift-IR state, instruction data is serially shifted through the instruction register on each TCK cycle. The first shift occurs on the first rising edge of TCK after entry to the Shift-IR state (i.e., no shifting occurs during the TCK cycle in which the TAP controller changes from Capture-IR to Shift-IR or from Exit2-IR to Shift-IR). The last shift occurs on the rising edge of TCK, upon which the TAP controller exits the Shift-IR state.

Exit1-IR, Exit2-IR

The Exit1-IR and Exit2-IR states are temporary states that end an instruction register scan. It is possible to return to the Shift-IR state from either Exit1-IR or Exit2-IR without recapturing the instruction register. On the first falling edge of TCK after entry to Exit1-IR, TDO goes from the active state to the high-impedance state.

Pause-IR

No specific function is performed in the stable Pause-IR state, in which the TAP controller can remain indefinitely. The Pause-IR state suspends and resumes instruction register scan operations without loss of data.

Update-IR

The current instruction is updated and takes effect on the falling edge of TCK, following entry to the Update-IR state.

register overview

With the exception of the bypass register, any test register can be thought of as a serial-shift register with a shadow latch on each bit. The bypass register differs in that it contains only a shift register. During the appropriate capture state (Capture-IR for instruction register, Capture-DR for data registers), the shift register can be parallel loaded from a source specified by the current instruction. During the appropriate shift state (Shift-IR or Shift-DR), the contents of the shift register are shifted out from TDO while new contents are shifted in at TDI. During the appropriate update state (Update-IR or Update-DR), the shadow latches are updated from the shift register.

instruction register description

The instruction register (IR) is eight bits long and tells the device what instruction is to be executed. Information contained in the instruction includes the mode of operation (either normal mode, in which the device performs its normal logic function, or test mode, in which the normal logic function is inhibited or altered), the test operation to be performed, which of the three data registers is to be selected for inclusion in the scan path during data-register scans, and the source of data to be captured into the selected data register during Capture-DR.

Table 3 lists the instructions supported by the ’ABT8652. The even-parity feature specified for SCOPE™ devices is supported in this device. Bit 7 of the instruction opcode is the parity bit. Any instructions that are defined for SCOPE™ devices but are not supported by this device default to BYPASS.

During Capture-IR, the IR captures the binary value 10000001. As an instruction is shifted in, this value is shifted out via TDO and can be inspected as verification that the IR is in the scan path. During Update-IR, the value that has been shifted into the IR is loaded into shadow latches. At this time, the current instruction is updated and any specified mode change takes effect. At power up or in the Test-Logic-Reset state, the IR is reset to the binary value 11111111, which selects the BYPASS instruction. The IR order of scan is shown in Figure 3.

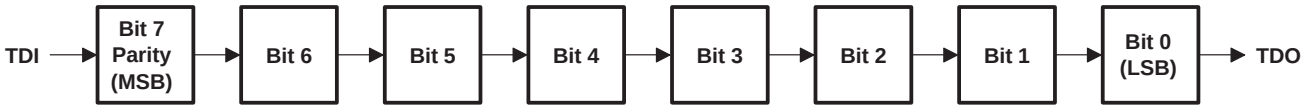

Figure 3. Instruction Register Order of Scan

data register description

boundary-scan register

The boundary-scan register (BSR) is 38 bits long. It contains one boundary-scan cell (BSC) for each normal-function input and two BSCs for each normal-function I/O (one for input data and one for output data). The BSR is used to store test data that is to be applied internally to the inputs of the normal on-chip logic and/or externally to the device output terminals, and/or to capture data that appears internally at the outputs of the normal on-chip logic and/or externally at the device input terminals.

The source of data to be captured into the BSR during Capture-DR is determined by the current instruction. The contents of the BSR can change during Run-Test/Idle as determined by the current instruction. At power up or in Test-Logic-Reset, the value of each BSC is reset to logic 0 except BSC 36, which is reset to logic 1.

The BSR order of scan is from TDI through bits 37–0 to TDO. Table 1 shows the BSR bits and their associated device pin signals.

Table 1. Boundary-Scan Register Configuration

BSR BIT NUMBER	DEVICE SIGNAL	BSR BIT NUMBER	DEVICE SIGNAL	BSR BIT NUMBER	DEVICE SIGNAL	BSR BIT NUMBER	DEVICE SIGNAL	BSR BIT NUMBER	DEVICE SIGNAL
37	OEAB	31	A8-I	23	A8-O	15	B8-I	7	B8-O
36	$\overline{\text{OEBA}}$	30	A7-I	22	A7-O	14	B7-I	6	B7-O
35	CLKAB	29	A6-I	21	A6-O	13	B6-I	5	B6-O
34	CLKBA	28	A5-I	20	A5-O	12	B5-I	4	B5-O
33	SAB	27	A4-I	19	A4-O	11	B4-I	3	B4-O
32	SBA	26	A3-I	18	A3-O	10	B3-I	2	B3-O
—	—	25	A2-I	17	A2-O	9	B2-I	1	B2-O
—	—	24	A1-I	16	A1-O	8	B1-I	0	B1-O

boundary-control register

The boundary-control register (BCR) is 11 bits long. The BCR is used in the context of the RUNT instruction to implement additional test operations not included in the basic SCOPE™ instruction set. Such operations include PRPG, PSA with input masking, and binary count up (COUNT). Table 4 shows the test operations that are decoded by the BCR.

During Capture-DR, the contents of the BCR are not changed. At power up or in Test-Logic-Reset, the BCR is reset to the binary value 00000000010, which selects the PSA test operation with no input masking.

The BCR order of scan is from TDI through bits 10–0 to TDO. Table 2 shows the BCR bits and their associated test control signals.

Table 2. Boundary-Control Register Configuration

BCR BIT NUMBER	TEST CONTROL SIGNAL	BCR BIT NUMBER	TEST CONTROL SIGNAL	BCR BIT NUMBER	TEST CONTROL SIGNAL
10	MASK8	6	MASK4	2	OPCODE2
9	MASK7	5	MASK3	1	OPCODE1
8	MASK6	4	MASK2	0	OPCODE0
7	MASK5	3	MASK1	—	—

bypass register

The bypass register is a 1-bit scan path that can be selected to shorten the length of the system scan path, thereby reducing the number of bits per test pattern that must be applied to complete a test operation.

During Capture-DR, the bypass register captures a logic 0. The bypass register order of scan is shown in Figure 4.

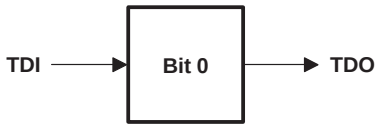

Figure 4. Bypass Register Order of Scan

instruction-register opcode description

The instruction-register opcodes are shown in Table 3. The following descriptions detail the operation of each instruction.

Table 3. Instruction-Register Opcodes

BINARY CODE† BIT 7 → BIT 0 MSB → LSB	SCOPE OPCODE	DESCRIPTION	SELECTED DATA REGISTER	MODE
00000000	EXTEST/INTEST	Boundary scan	Boundary scan	Test
10000001	BYPASS‡	Bypass scan	Bypass	Normal
10000010	SAMPLE/PRELOAD	Sample boundary	Boundary scan	Normal
00000011	INTEST/EXTEST	Boundary scan	Boundary scan	Test
10000100	BYPASS‡	Bypass scan	Bypass	Normal
00000101	BYPASS‡	Bypass scan	Bypass	Normal
00000110	HIGHZ	Control boundary to high impedance	Bypass	Modified test
10000111	CLAMP	Control boundary to 1/0	Bypass	Test
10001000	BYPASS‡	Bypass scan	Bypass	Normal
00001001	RUNT	Boundary run test	Bypass	Test
00001010	READBN	Boundary read	Boundary scan	Normal
10001011	READBT	Boundary read	Boundary scan	Test
00001100	CELLTST	Boundary self test	Boundary scan	Normal
10001101	TOPHIP	Boundary toggle outputs	Bypass	Test
10001110	SCANCN	Boundary-control register scan	Boundary control	Normal
00001111	SCANCT	Boundary-control register scan	Boundary control	Test
All others	BYPASS	Bypass scan	Bypass	Normal

† Bit 7 is used to maintain even parity in the 8-bit instruction.
‡ The BYPASS instruction is executed in lieu of a SCOPE™ instruction that is not supported in the ’ABT8652.

boundary scan

This instruction conforms to the IEEE Standard 1149.1-1990 EXTEST and INTEST instructions. The BSR is selected in the scan path. Data appearing at the device input terminals is captured in the input BSCs, while data appearing at the outputs of the normal on-chip logic is captured in the output BSCs. Data that has been scanned into the input BSCs is applied to the inputs of the normal on-chip logic, while data that has been scanned into the output BSCs is applied to the device output terminals. The device operates in the test mode.

bypass scan

This instruction conforms to the IEEE Standard 1149.1-1990 BYPASS instruction. The bypass register is selected in the scan path. A logic 0 value is captured in the bypass register during Capture-DR. The device operates in the normal mode.

sample boundary

This instruction conforms to the IEEE Standard 1149.1-1990 SAMPLE/PRELOAD instruction. The BSR is selected in the scan path. Data appearing at the device input terminals is captured in the input BSCs, while data appearing at the outputs of the normal on-chip logic is captured in the output BSCs. The device operates in the normal mode.

control boundary to high impedance

This instruction conforms to the IEEE Standard 1149.1a-1993 HIGHZ instruction. The bypass register is selected in the scan path. A logic 0 value is captured in the bypass register during Capture-DR. The device operates in a modified test mode in which all device I/O terminals are placed in the high-impedance state, the device input terminals remain operational, and the normal on-chip logic function is performed.

control boundary to 1/0

This instruction conforms to the IEEE Standard 1149.1a-1993 CLAMP instruction. The bypass register is selected in the scan path. A logic 0 value is captured in the bypass register during Capture-DR. Data in the input BSCs is applied to the inputs of the normal on-chip logic, while data in the output BSCs is applied to the device output terminals. The device operates in the test mode.

boundary run test

The bypass register is selected in the scan path. A logic 0 value is captured in the bypass register during Capture-DR. The device operates in the test mode. The test operation specified in the BCR is executed during Run-Test/Idle. The five test operations decoded by the BCR are: sample inputs/toggle outputs (TOPSIP), PRPG, PSA, simultaneous PSA and PRPG (PSA/PRPG), and simultaneous PSA and binary count up (PSA/COUNT).

boundary read

The BSR is selected in the scan path. The value in the BSR remains unchanged during Capture-DR. This instruction is useful for inspecting data after a PSA operation.

boundary self test

The BSR is selected in the scan path. All BSCs capture the inverse of their current values during Capture-DR. In this way, the contents of the shadow latches can be read out to verify the integrity of both shift-register and shadow-latch elements of the BSR. The device operates in the normal mode.

boundary toggle outputs

The bypass register is selected in the scan path. A logic 0 value is captured in the bypass register during Capture-DR. Data in the shift-register elements of the selected output BSCs is toggled on each rising edge of TCK in Run-Test/Idle, updated in the shadow latches, and applied to the associated device output terminals on each falling edge of TCK in Run-Test/Idle. Data in the selected input BSCs remains constant and is applied to the inputs of the normal on-chip logic. Data appearing at the device input terminals is not captured in the input BSCs. The device operates in the test mode.

boundary-control-register scan

The BCR is selected in the scan path. The value in the BCR remains unchanged during Capture-DR. This operation must be performed before a boundary-run test operation to specify which test operation is to be executed.

boundary-control-register opcode description

The BCR opcodes are decoded from BCR bits 2–0 as shown in Table 4. The selected test operation is performed while the RUNT instruction is executed in the Run-Test/Idle state. The following descriptions detail the operation of each BCR instruction and illustrate the associated PSA and PRPG algorithms.

Table 4. Boundary-Control Register Opcodes

BINARY CODE BIT 2 → BIT 0 MSB → LSB	DESCRIPTION
X00	Sample inputs/toggle outputs (TOPSIP)
X01	Pseudo-random pattern generation/16-bit mode (PRPG)
X10	Parallel-signature analysis/16-bit mode (PSA)
011	Simultaneous PSA and PRPG/8-bit mode (PSA/PRPG)
111	Simultaneous PSA and binary count up/8-bit mode (PSA/COUNT)

In general, while the control input BSCs (bits 37–32) are not included in the sample, toggle, PSA, PRPG, or COUNT algorithms, the output-enable BSCs (bits 37–36 of the BSR) do control the drive state (active or high impedance) of the selected device output terminals. These BCR instructions are valid only when the device is operating in one direction of data flow (that is, OEAB = $\overline{\text{OEBA}}$). Otherwise, the bypass instruction is operated.

PSA input masking

Bits 10–3 of the BCR specify device input terminals to be masked from PSA operations. Bit 10 selects masking for device input pin A8 during A-to-B data flow or for device input pin B8 during B-to-A data flow. Bit 3 selects masking for device input terminals A1 or B1 during A-to-B or B-to-A data flow, respectively. Bits intermediate to 10 and 3 mask corresponding device input terminals in order, from most significant to least significant, as indicated in Table 3. When the mask bit that corresponds to a particular device input has a logic 1 value, the device input pin is masked from any PSA operation, i.e., the state of the device input pin is ignored and has no effect on the generated signature. Otherwise, when a mask bit has a logic 0 value, the corresponding device input is not masked from the PSA operation.

sample inputs/toggle outputs (TOPSIP)

Data appearing at the selected device input terminals is captured in the shift-register elements of the selected BSCs on each rising edge of TCK. This data is updated in the shadow latches of the selected input BSCs and applied to the inputs of the normal on-chip logic. Data in the shift-register elements of the selected output BSCs is toggled on each rising edge of TCK, updated in the shadow latches, and applied to the associated device output terminals on each falling edge of TCK.

pseudo-random pattern generation (PRPG)

A pseudo-random pattern is generated in the shift-register elements of the selected BSCs on each rising edge of TCK, updated in the shadow latches, and applied to the associated device output terminals on each falling edge of TCK. This data also is updated in the shadow latches of the selected input BSCs and applied to the inputs of the normal on-chip logic. Figures 5 and 6 show the 16-bit linear-feedback shift-register algorithms through which the patterns are generated. An initial seed value should be scanned into the BSR before performing this operation. A seed value of all zeroes does not produce additional patterns.

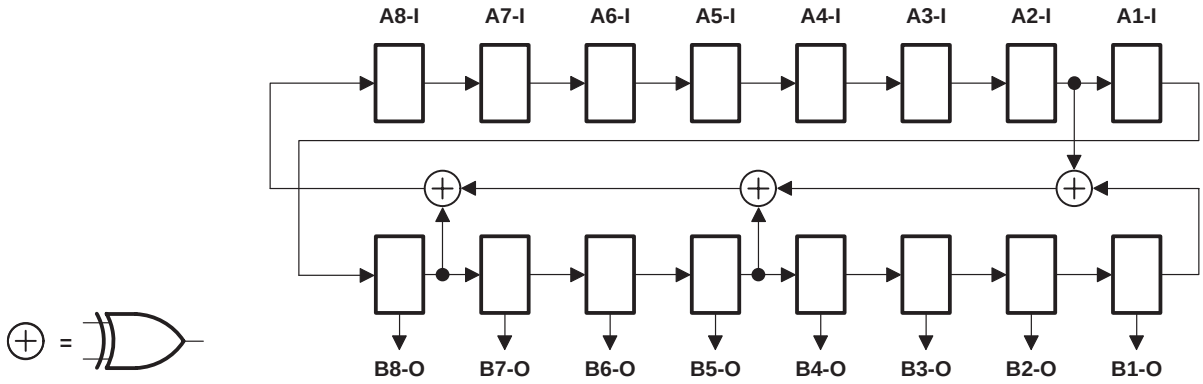

Figure 5. 16-Bit PRPG Configuration (OEAB = 1, $\overline{\text{OEBA}}$ = 1)

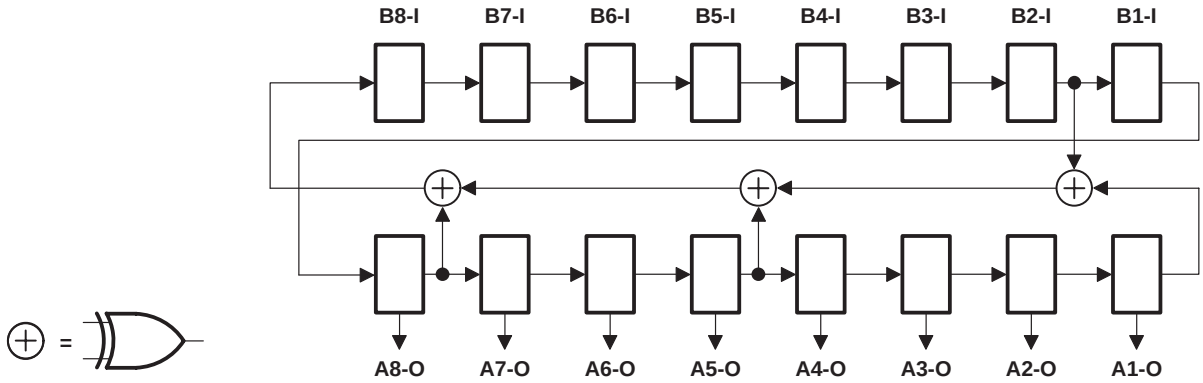

Figure 6. 16-Bit PRPG Configuration (OEAB = 0, $\overline{\text{OEBA}}$ = 0)

parallel-signature analysis (PSA)

Data appearing at the selected device input terminals is compressed into a 16-bit parallel signature in the shift-register elements of the selected BSCs on each rising edge of TCK. This data is updated in the shadow latches of the selected input BSCs and applied to the inputs of the normal on-chip logic. Data in the shadow latches of the selected output BSCs remains constant and is applied to the device outputs. Figures 7 and 8 show the 16-bit linear-feedback shift-register algorithms through which the signature is generated. An initial seed value should be scanned into the BSR before performing this operation.

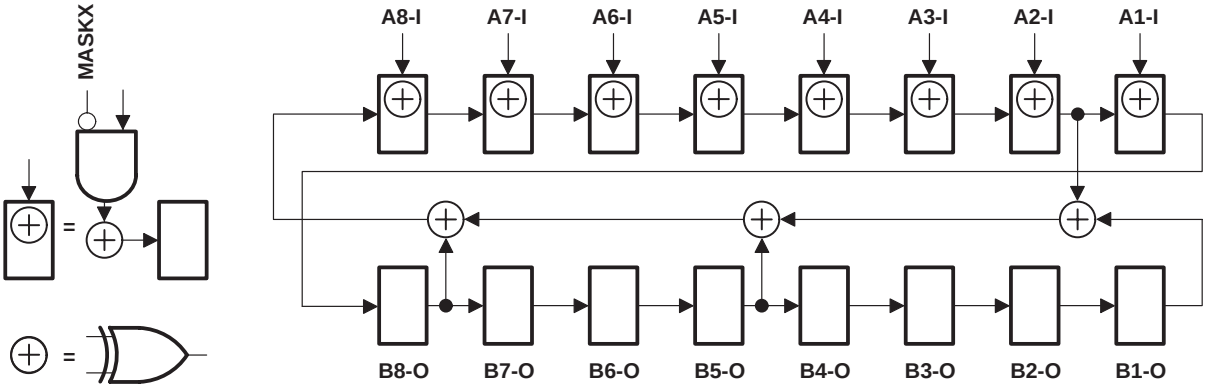

Figure 7. 16-Bit PSA Configuration (OEAB = 1, $\overline{\text{OEBA}}$ = 1)

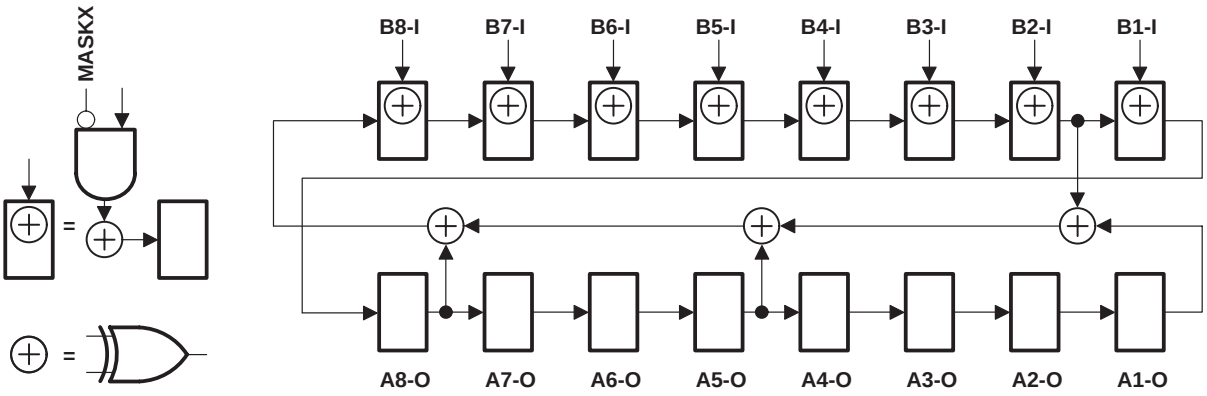

Figure 8. 16-Bit PSA Configuration (OEAB = 0, $\overline{\text{OEBA}}$ = 0)

simultaneous PSA and PRPG (PSA/PRPG)

Data appearing at the selected device input terminals is compressed into an 8-bit parallel signature in the shift-register elements of the selected input BSCs on each rising edge of TCK. This data is updated in the shadow latches of the selected input BSCs and applied to the inputs of the normal on-chip logic. At the same time, an 8-bit pseudo-random pattern is generated in the shift-register elements of the selected output BSCs on each rising edge of TCK, updated in the shadow latches, and applied to the associated device output terminals on each falling edge of TCK. Figures 9 and 10 show the 8-bit linear-feedback shift-register algorithms through which the signature and patterns are generated. An initial seed value should be scanned into the BSR before performing this operation. A seed value of all zeroes does not produce additional patterns.

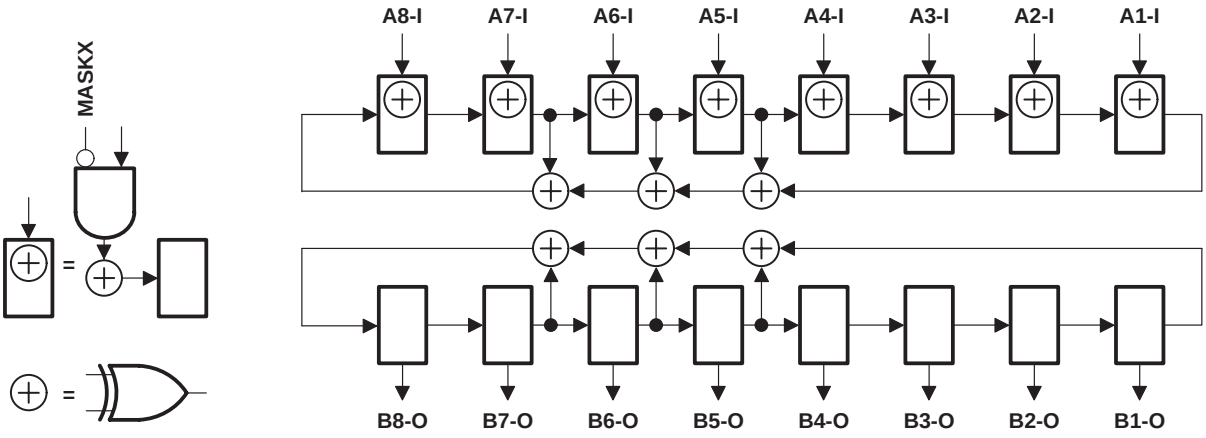

Figure 9. 8-Bit PSA/PRPG Configuration (OEAB = 1, $\overline{\text{OEBA}}$ = 1)

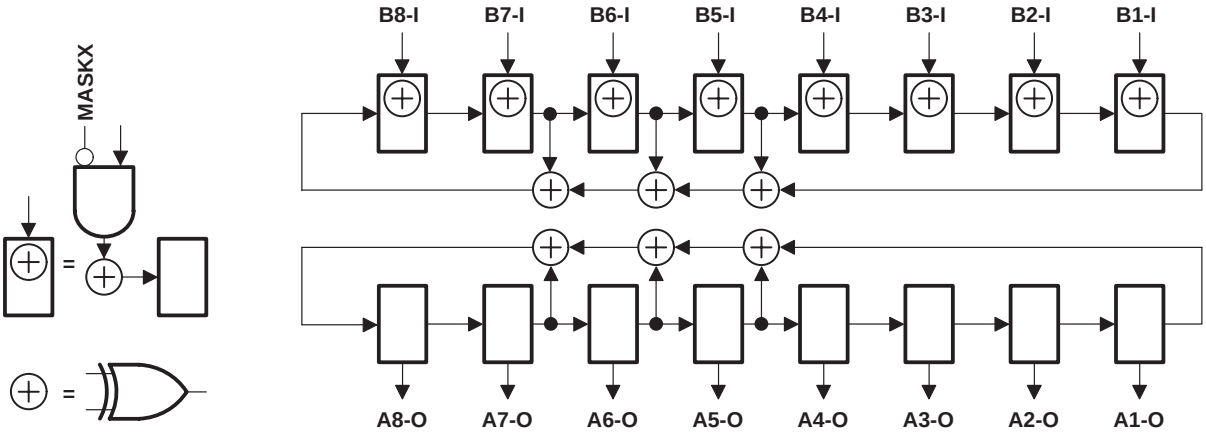

Figure 10. 8-Bit PSA/PRPG Configuration (OEAB = 0, $\overline{\text{OEBA}}$ = 0)

simultaneous PSA and binary count up (PSA/COUNT)

Data appearing at the selected device input terminals is compressed into an 8-bit parallel signature in the shift-register elements of the selected input BSCs on each rising edge of TCK. This data is updated in the shadow latches of the selected input BSCs and applied to the inputs of the normal on-chip logic. At the same time, an 8-bit binary count-up pattern is generated in the shift-register elements of the selected output BSCs on each rising edge of TCK, updated in the shadow latches, and applied to the associated device output terminals on each falling edge of TCK. In addition, the shift-register elements of the opposite output BSCs count carries out of the selected output BSCs extending the count to 16 bits. Figures 11 and 12 show the 8-bit linear-feedback shift-register algorithms through which the signature is generated. An initial seed value should be scanned into the BSR before performing this operation.

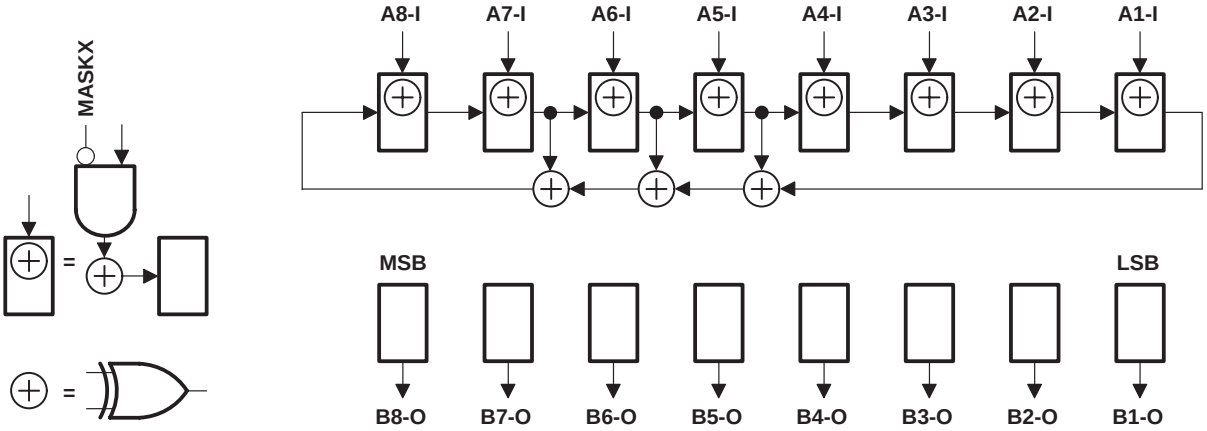

Figure 11. 8-Bit PSA/COUNT Configuration (OEAB = 1, $\overline{\text{OEBA}}$ = 1)

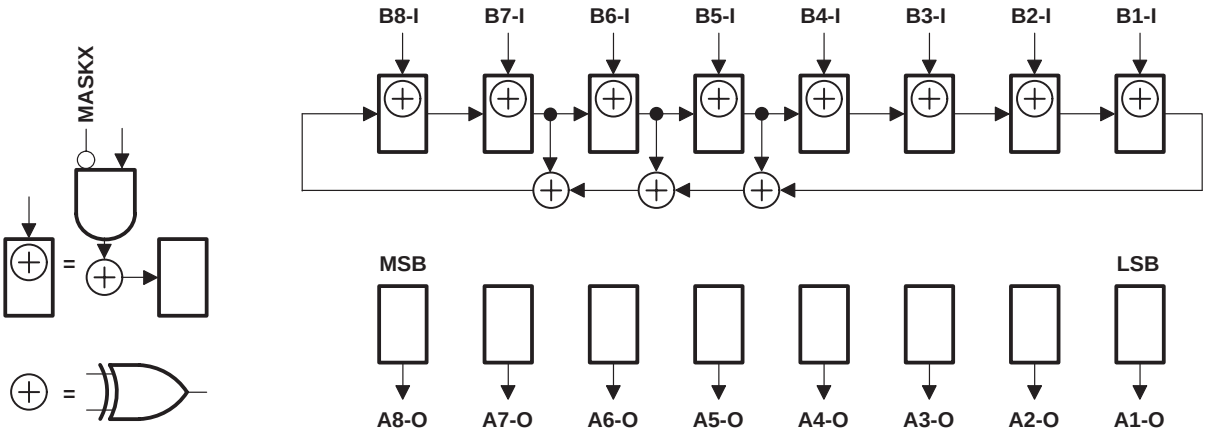

Figure 12. 8-Bit PSA/COUNT Configuration (OEAB = 0, $\overline{\text{OEBA}}$ = 0)

timing description

All test operations of the ’ABT8652 are synchronous to TCK. Data on the TDI, TMS, and normal-function inputs is captured on the rising edge of TCK. Data appears on the TDO and normal-function output terminals on the falling edge of TCK. The TAP controller is advanced through its states (as shown in Figure 2) by changing the value of TMS on the falling edge of TCK and then applying a rising edge to TCK.

A simple timing example is shown in Figure 13. In this example, the TAP controller begins in the Test-Logic-Reset state and is advanced through its states as necessary to perform one instruction-register scan and one data-register scan. While in the Shift-IR and Shift-DR states, TDI is used to input serial data, and TDO is used to output serial data. The TAP controller is then returned to the Test-Logic-Reset state. Table 5 details the operation of the test circuitry during each TCK cycle.

Table 5. Explanation of Timing Example

TCK CYCLE(S)	TAP STATE AFTER TCK	DESCRIPTION
1	Test-Logic-Reset	TMS is changed to a logic 0 value on the falling edge of TCK to begin advancing the TAP controller toward the desired state.
2	Run-Test/Idle	
3	Select-DR-Scan	
4	Select-IR-Scan	
5	Capture-IR	The IR captures the 8-bit binary value 10000001 on the rising edge of TCK as the TAP controller exits the Capture-IR state.
6	Shift-IR	TDO becomes active and TDI is made valid on the falling edge of TCK. The first bit is shifted into the TAP on the rising edge of TCK as the TAP controller advances to the next state.
7–13	Shift-IR	One bit is shifted into the IR on each TCK rising edge. With TDI held at a logic 1 value, the 8-bit binary value 11111111 is serially scanned into the IR. At the same time, the 8-bit binary value 10000001 is serially scanned out of the IR via TDO. In TCK cycle 13, TMS is changed to a logic 1 value to end the IR scan on the next TCK cycle. The last bit of the instruction is shifted as the TAP controller advances from Shift-IR to Exit1-IR.
14	Exit1-IR	TDO becomes inactive (goes to the high-impedance state) on the falling edge of TCK.
15	Update-IR	The IR is updated with the new instruction (BYPASS) on the falling edge of TCK.
16	Select-DR-Scan	
17	Capture-DR	The bypass register captures a logic 0 value on the rising edge of TCK as the TAP controller exits the Capture-DR state.
18	Shift-DR	TDO becomes active and TDI is made valid on the falling edge of TCK. The first bit is shifted into the TAP on the rising edge of TCK as the TAP controller advances to the next state.
19–20	Shift-DR	The binary value 101 is shifted in via TDI, while the binary value 010 is shifted out via TDO.
21	Exit1-DR	TDO becomes inactive (goes to the high-impedance state) on the falling edge of TCK.
22	Update-DR	In general, the selected data register is updated with the new data on the falling edge of TCK.
23	Select-DR-Scan	
24	Select-IR-Scan	
25	Test-Logic-Reset	Test operation completed

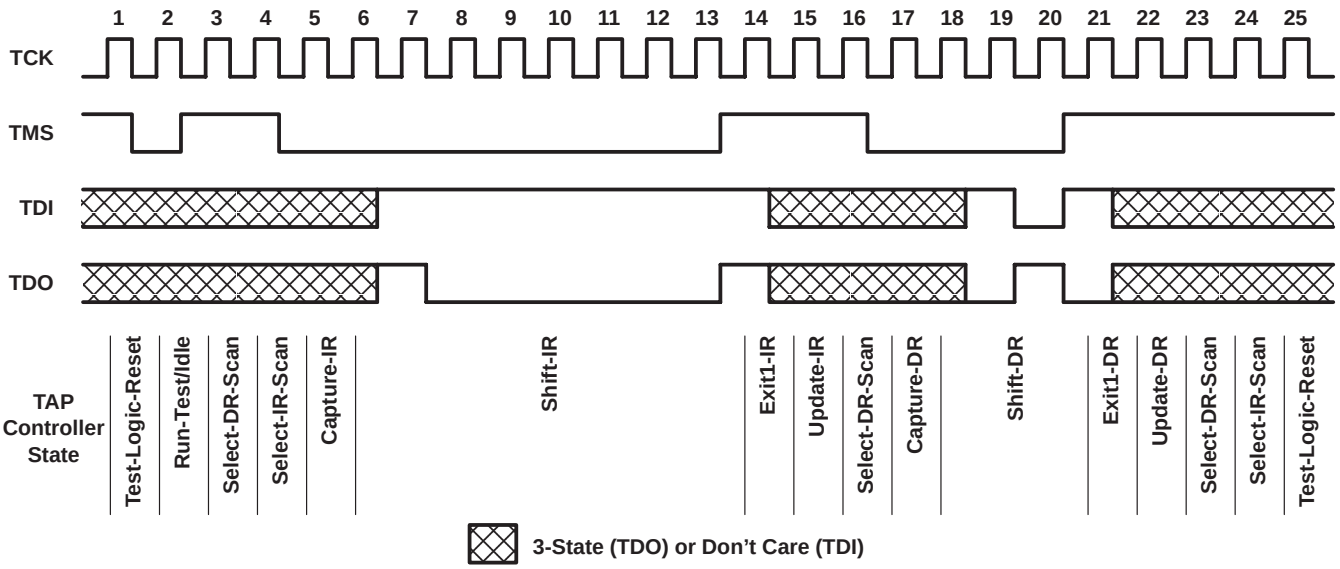

Figure 13. Timing Example

absolute maximum ratings over operating free-air temperature range (unless otherwise noted)†

Supply voltage range, V_{CC} . . . . . –0.5 V to 7 V
Input voltage range, V_I: except I/O ports (see Note 1) . . . . . –0.5 V to 7 V
I/O ports (see Note 1) . . . . . –0.5 V to 5.5 V
Voltage range applied to any output in the high state or power-off state, V_O . . . . . –0.5 V to 5.5 V
Current into any output in the low state, I_O: SN54ABT8652 . . . . . 96 mA
SN74ABT8652 . . . . . 128 mA
Input clamp current, I_{IK} (V_I < 0) . . . . . –18 mA
Output clamp current, I_{OK} (V_O < 0) . . . . . –50 mA
Maximum package power dissipation at T_A = 55°C (in still air) (see Note 2): DL package . . . . . 0.7 W
DW package . . . . . 1.7 W
Storage temperature range, T_{stg} . . . . . –65°C to 150°C

† Stresses beyond those listed under "absolute maximum ratings" may cause permanent damage to the device. These are stress ratings only, and functional operation of the device at these or any other conditions beyond those indicated under "recommended operating conditions" is not implied. Exposure to absolute-maximum-rated conditions for extended periods may affect device reliability.

NOTES: 1. The input and output negative-voltage ratings may be exceeded if the input and output clamp-current ratings are observed.
2. The maximum package power dissipation is calculated using a junction temperature of 150°C and a board trace length of 750 mils. For more information, refer to the *Package Thermal Considerations* application note in the *ABT Advanced BiCMOS Technology Data Book*, literature number SCBD002.

recommended operating conditions (see Note 3)

		SN54ABT8652		SN74ABT8652		UNIT
		MIN	MAX	MIN	MAX	
V_{CC}	Supply voltage	4.5	5.5	4.5	5.5	V
V_{IH}	High-level input voltage	2		2		V
V_{IL}	Low-level input voltage		0.8		0.8	V
V_I	Input voltage	0	V_{CC}	0	V_{CC}	V
I_{OH}	High-level output current		–24		–32	mA
I_{OL}	Low-level output current		48		64	mA
$\Delta t/\Delta v$	Input transition rise or fall rate		10		10	ns/V
T_A	Operating free-air temperature	–55	125	–40	85	°C

NOTE 3: Unused pins (input or I/O) must be held high or low to prevent them from floating.

electrical characteristics over recommended operating free-air temperature range (unless otherwise noted)

PARAMETER		TEST CONDITIONS		T_A = 25°C			SN54ABT8652		SN74ABT8652		UNIT
				MIN	TYP†	MAX	MIN	MAX	MIN	MAX	
V_{IK}		V_{CC} = 4.5 V,	I_I = –18 mA			–1.2		–1.2		–1.2	V
V_{OH}		V_{CC} = 4.5 V,	I_{OH} = –3 mA	2.5			2.5		2.5		V
		V_{CC} = 5 V,	I_{OH} = –3 mA	3			3		3		
		V_{CC} = 4.5 V	I_{OH} = –24 mA	2			2				
			I_{OH} = –32 mA	2*					2		
V_{OL}		V_{CC} = 4.5 V	I_{OL} = 48 mA			0.55		0.55			V
			I_{OL} = 64 mA			0.55*				0.55	
I_I	CLK, OEAB, OEBA, S, TCK	V_{CC} = 5.5 V, V_I = V_{CC} or GND				±1		±1		±1	µA
	A or B ports					±100		±100		±100	
I_{IH}	TDI, TMS	V_{CC} = 5.5 V,	V_I = V_{CC}			10		10		10	µA
I_{IL}	TDI, TMS	V_{CC} = 5.5 V,	V_I = GND	–40		–160	–40	–160	–40	–160	µA
I_{OZH}‡		V_{CC} = 5.5 V,	V_O = 2.7 V			50		50		50	µA
I_{OZL}‡		V_{CC} = 5.5 V,	V_O = 0.5 V			–50		–50		–50	µA
I_{OZPU}		V_{CC} = 0 to 2 V, V_O = 0.5 V or 2.7 V				±50		±50		±50	µA
I_{OZPD}		V_{CC} = 2 V to 0, V_O = 0.5 V or 2.7 V				±50		±50		±50	µA
I_{off}		V_{CC} = 0,	V_I or V_O ≤ 4.5 V			±100				±100	µA
I_{CEX}	Outputs high	V_{CC} = 5.5 V,	V_O = 5.5 V			50		50		50	µA
I_O§		V_{CC} = 5.5 V,	V_O = 2.5 V	–50	–100	–180	–50	–180	–50	–180	mA
I_{CC}	A or B ports	V_{CC} = 5.5 V, I_O = 0, V_I = V_{CC} or GND	Outputs high		0.9	2		2		2	mA
			Outputs low		30	38		38		38	
			Outputs disabled		0.9	2		2		2	
ΔI_{CC}¶		V_{CC} = 5.5 V, One input at 3.4 V, Other inputs at V_{CC} or GND				1.5		1.5		1.5	mA
C_i	Control inputs	V_I = 2.5 V or 0.5 V			3						pF
C_{io}	A or B ports	V_O = 2.5 V or 0.5 V			10						pF
C_o	TDO	V_O = 2.5 V or 0.5 V			8						pF

* On products compliant to MIL-PRF-38535, this parameter does not apply.
† All typical values at V_{CC} = 5 V.
‡ The parameters I_{OZH} and I_{OZL} include the input leakage current.
§ Not more than one output should be tested at a time, and the duration of the test should not exceed one second.
¶ This is the increase in supply current for each input that is at the specified TTL voltage level rather than V_{CC} or GND.

timing requirements over recommended ranges of supply voltage and operating free-air temperature (unless otherwise noted) (normal mode) (see Figure 14)

			SN54ABT8652		SN74ABT8652		UNIT
			MIN	MAX	MIN	MAX	
f_{clock}	Clock frequency	CLKAB or CLKBA	0	100	0	100	MHz
t_w	Pulse duration	CLKAB or CLKBA high or low	3		3		ns
t_{su}	Setup time	A before CLKAB↑ or B before CLKBA↑	5.1		4.5		ns
t_h	Hold time	A after CLKAB↑ or B after CLKBA↑	0.5		0		ns

timing requirements over recommended ranges of supply voltage and operating free-air temperature (unless otherwise noted) (test mode) (see Figure 14)

			SN54ABT8652		SN74ABT8652		UNIT
			MIN	MAX	MIN	MAX	
f_{clock}	Clock frequency	TCK	0	50	0	50	MHz
t_w	Pulse duration	TCK high or low	5		5		ns
t_{su}	Setup time	A, B, CLK, OEAB, $\overline{OEBA}$, or S before TCK↑	5.1		5		ns
		TDI before TCK↑	6		6		
		TMS before TCK↑	6		6		
t_h	Hold time	A, B, CLK, OEAB, $\overline{OEBA}$, or S after TCK↑	0.6		0		ns
		TDI after TCK↑	0.9		0		
		TMS after TCK↑	0.9		0		
t_d	Delay time	Power up to TCK↑	50*		50		ns
t_r	Rise time	V_{CC} power up	1*		1		µs

* On products compliant to MIL-PRF-38535, this parameter is not production tested.

switching characteristics over recommended ranges of supply voltage and operating free-air temperature (unless otherwise noted) (normal mode) (see Figure 14)

PARAMETER	FROM (INPUT)	TO (OUTPUT)	SN54ABT8652					UNIT
			V_{CC} = 5 V, T_A = 25°C			MIN	MAX	
			MIN	TYP	MAX			
f_{max}	CLKAB or CLKBA		100	130		100		MHz
t_{PLH}	A or B	B or A	2	3.7	5.1	2	6	ns
t_{PHL}			1.5	3.5	4.4	1.5	5.8	
t_{PLH}	CLKAB or CLKBA	B or A	2.5	4.4	5.3	2.5	6.3	ns
t_{PHL}			2.5	4.3	5.4	2.5	6.7	
t_{PLH}	SAB or SBA	B or A	2	4.8	6.1	2	7.5	ns
t_{PHL}			2	4.7	6.7	2	7.8	
t_{PZH}	OEAB or $\overline{OEBA}$	B or A	1.7	4.4	5.4	1.7	6.7	ns
t_{PZL}			2	5.2	6.2	2	7.6	
t_{PHZ}	OEAB or $\overline{OEBA}$	B or A	2	5.9	6.9	2	8.3	ns
t_{PLZ}			2	5.2	6.2	2	7.8	

switching characteristics over recommended ranges of supply voltage and operating free-air temperature (unless otherwise noted) (normal mode) (see Figure 14)

PARAMETER	FROM (INPUT)	TO (OUTPUT)	SN74ABT8652					UNIT
			V_{CC} = 5 V, T_A = 25°C			MIN	MAX	
			MIN	TYP	MAX			
f_{max}	CLKAB or CLKBA		100	130		100		MHz
t_{PLH}	A or B	B or A	2	3.7	4.5	2	5.2	ns
t_{PHL}			1.5	3.5	4.4	1.5	5.5	
t_{PLH}	CLKAB or CLKBA	B or A	2.5	4.4	5.3	2.5	6	ns
t_{PHL}			2.5	4.3	5.2	2.5	6.2	
t_{PLH}	SAB or SBA	B or A	2	4.8	6	2	7.3	ns
t_{PHL}			2	4.7	5.9	2	7.4	
t_{PZH}	OEAB or $\overline{OEBA}$	B or A	2	4.4	5.4	2	6.5	ns
t_{PZL}			2	5.2	6.2	2	7.5	
t_{PHZ}	OEAB or $\overline{OEBA}$	B or A	2	5.9	6.9	2	7.9	ns
t_{PLZ}			2	5.2	6.2	2	7.4	

switching characteristics over recommended ranges of supply voltage and operating free-air temperature (unless otherwise noted) (test mode) (see Figure 14)

PARAMETER	FROM (INPUT)	TO (OUTPUT)	SN54ABT8652					UNIT
			V_{CC} = 5 V, T_A = 25°C			MIN	MAX	
			MIN	TYP	MAX			
f_{max}	TCK		50	90		50		MHz
t_{PLH}	TCK↓	A or B	3.5	8	10.2	3.3	13.7	ns
t_{PHL}			3	7.7	9	3	12	
t_{PLH}	TCK↓	TDO	2.5	4.3	5.5	2.5	7	ns
t_{PHL}			2.5	4.2	5.5	2.5	7	
t_{PZH}	TCK↓	A or B	4.5	8.2	9.5	4.3	12.5	ns
t_{PZL}			4.5	9	10.5	4.5	13.5	
t_{PZH}	TCK↓	TDO	2.5	4.3	5.5	2.5	7	ns
t_{PZL}			2.5	4.9	6	2.5	7.5	
t_{PHZ}	TCK↓	A or B	3.5	8.4	12.9	3.5	14	ns
t_{PLZ}			3	8	10.5	3	13.5	
t_{PHZ}	TCK↓	TDO	3	5.9	7	3	9	ns
t_{PLZ}			3	5	6.5	3	8	

switching characteristics over recommended ranges of supply voltage and operating free-air temperature (unless otherwise noted) (test mode) (see Figure 14)

PARAMETER	FROM (INPUT)	TO (OUTPUT)	SN74ABT8652					UNIT
			V_{CC} = 5 V, T_A = 25°C			MIN	MAX	
			MIN	TYP	MAX			
f_{max}	TCK		50	90		50		MHz
t_{PLH}	TCK↓	A or B	3.5	8	9.5	3.5	12	ns
t_{PHL}			3	7.7	9	3	11.5	
t_{PLH}	TCK↓	TDO	2.5	4.3	5.5	2.5	6.5	ns
t_{PHL}			2.5	4.2	5.5	2.5	6.5	
t_{PZH}	TCK↓	A or B	4.5	8.2	9.5	4.5	12	ns
t_{PZL}			4.5	9	10.5	4.5	13	
t_{PZH}	TCK↓	TDO	2.5	4.3	5.5	2.5	6.5	ns
t_{PZL}			2.5	4.9	6	2.5	7	
t_{PHZ}	TCK↓	A or B	3.5	8.4	10.5	3.5	13.5	ns
t_{PLZ}			3	8	10.5	3	13	
t_{PHZ}	TCK↓	TDO	3	5.9	7	3	8.5	ns
t_{PLZ}			3	5	6.5	3	7.5	

PARAMETER MEASUREMENT INFORMATION

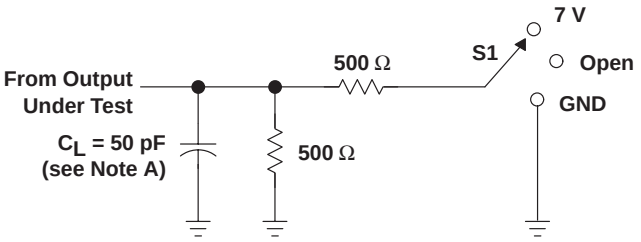

LOAD CIRCUIT

TEST	S1
t_{PLH}/t_{PHL}	Open
t_{PLZ}/t_{PZL}	7 V
t_{PHZ}/t_{PZH}	Open

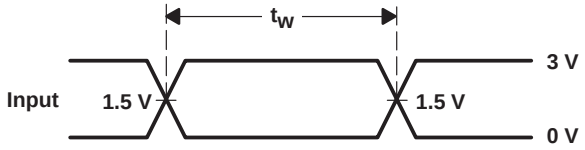

VOLTAGE WAVEFORMS
PULSE DURATION

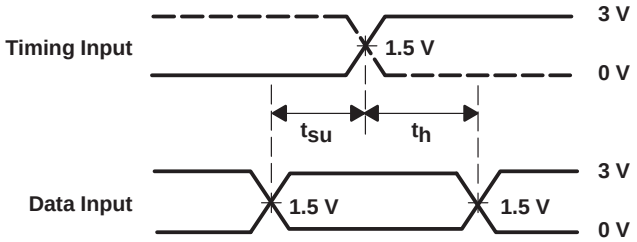

VOLTAGE WAVEFORMS
SETUP AND HOLD TIMES

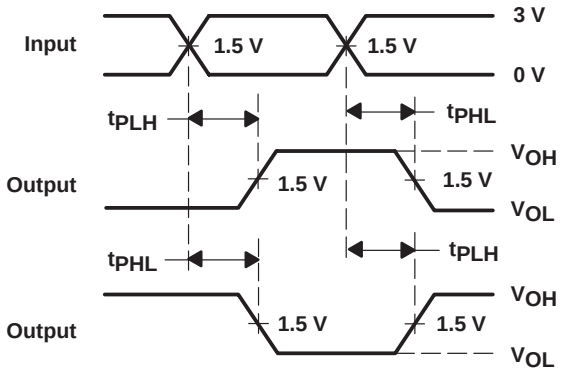

VOLTAGE WAVEFORMS
PROPAGATION DELAY TIMES
INVERTING AND NONINVERTING OUTPUTS

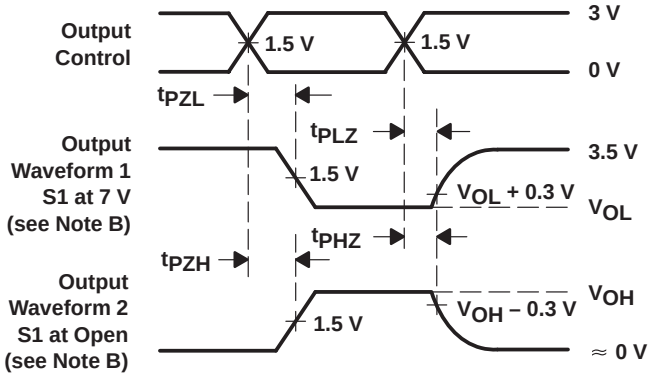

VOLTAGE WAVEFORMS
ENABLE AND DISABLE TIMES
LOW- AND HIGH-LEVEL ENABLING

NOTES: A. C_L includes probe and jig capacitance.
B. Waveform 1 is for an output with internal conditions such that the output is low except when disabled by the output control. Waveform 2 is for an output with internal conditions such that the output is high except when disabled by the output control.
C. All input pulses are supplied by generators having the following characteristics: PRR ≤ 10 MHz, Z_O = 50 Ω, t_r ≤ 2.5 ns, t_f ≤ 2.5 ns.
D. The outputs are measured one at a time with one transition per measurement.

Figure 14. Load Circuit and Voltage Waveforms

PACKAGING INFORMATION

Orderable Device	Status [1]	Package Type	Package Drawing	Pins	Package Qty	Eco Plan [2]	Lead/ Ball Finish	MSL Peak Temp [3]	Samples (Requires Login)
5962-9461601Q3A	ACTIVE	LCCC	FK	28	1	TBD	Call TI	Call TI	
5962-9461601QXA	ACTIVE	CDIP	JT	28	1	TBD	Call TI	Call TI	
SN74ABT8652DL	ACTIVE	SSOP	DL	28	40	Green (RoHS & no Sb/Br)	CU NIPDAU	Level-1-260C-UNLIM	
SN74ABT8652DLG4	ACTIVE	SSOP	DL	28	40	Green (RoHS & no Sb/Br)	CU NIPDAU	Level-1-260C-UNLIM	
SN74ABT8652DW	ACTIVE	SOIC	DW	28	20	Green (RoHS & no Sb/Br)	CU NIPDAU	Level-1-260C-UNLIM	
SN74ABT8652DWE4	ACTIVE	SOIC	DW	28	20	Green (RoHS & no Sb/Br)	CU NIPDAU	Level-1-260C-UNLIM	
SN74ABT8652DWG4	ACTIVE	SOIC	DW	28	20	Green (RoHS & no Sb/Br)	CU NIPDAU	Level-1-260C-UNLIM	
SNJ54ABT8652FK	ACTIVE	LCCC	FK	28	1	TBD	POST-PLATE	N / A for Pkg Type	
SNJ54ABT8652JT	ACTIVE	CDIP	JT	28	1	TBD	A42	N / A for Pkg Type	

[1] The marketing status values are defined as follows:
ACTIVE: Product device recommended for new designs.
LIFEBUY: TI has announced that the device will be discontinued, and a lifetime-buy period is in effect.
NRND: Not recommended for new designs. Device is in production to support existing customers, but TI does not recommend using this part in a new design.
PREVIEW: Device has been announced but is not in production. Samples may or may not be available.
OBSOLETE: TI has discontinued the production of the device.

[2] Eco Plan - The planned eco-friendly classification: Pb-Free (RoHS), Pb-Free (RoHS Exempt), or Green (RoHS & no Sb/Br) - please check http://www.ti.com/productcontent for the latest availability information and additional product content details.
TBD: The Pb-Free/Green conversion plan has not been defined.
Pb-Free (RoHS): TI's terms "Lead-Free" or "Pb-Free" mean semiconductor products that are compatible with the current RoHS requirements for all 6 substances, including the requirement that lead not exceed 0.1% by weight in homogeneous materials. Where designed to be soldered at high temperatures, TI Pb-Free products are suitable for use in specified lead-free processes.
Pb-Free (RoHS Exempt): This component has a RoHS exemption for either 1) lead-based flip-chip solder bumps used between the die and package, or 2) lead-based die adhesive used between the die and leadframe. The component is otherwise considered Pb-Free (RoHS compatible) as defined above.
Green (RoHS & no Sb/Br): TI defines "Green" to mean Pb-Free (RoHS compatible), and free of Bromine (Br) and Antimony (Sb) based flame retardants (Br or Sb do not exceed 0.1% by weight in homogeneous material)

[3] MSL, Peak Temp. -- The Moisture Sensitivity Level rating according to the JEDEC industry standard classifications, and peak solder temperature.

Important Information and Disclaimer: The information provided on this page represents TI's knowledge and belief as of the date that it is provided. TI bases its knowledge and belief on information provided by third parties, and makes no representation or warranty as to the accuracy of such information. Efforts are underway to better integrate information from third parties. TI has taken and

continues to take reasonable steps to provide representative and accurate information but may not have conducted destructive testing or chemical analysis on incoming materials and chemicals. TI and TI suppliers consider certain information to be proprietary, and thus CAS numbers and other limited information may not be available for release.

In no event shall TI's liability arising out of such information exceed the total purchase price of the TI part(s) at issue in this document sold by TI to Customer on an annual basis.

OTHER QUALIFIED VERSIONS OF SN54ABT8652, SN74ABT8652 :

- Catalog: SN74ABT8652
- Military: SN54ABT8652

NOTE: Qualified Version Definitions:

- Catalog - TI's standard catalog product
- Military - QML certified for Military and Defense Applications

JT (R-GDIP-T)** **CERAMIC DUAL-IN-LINE**

24 LEADS SHOWN

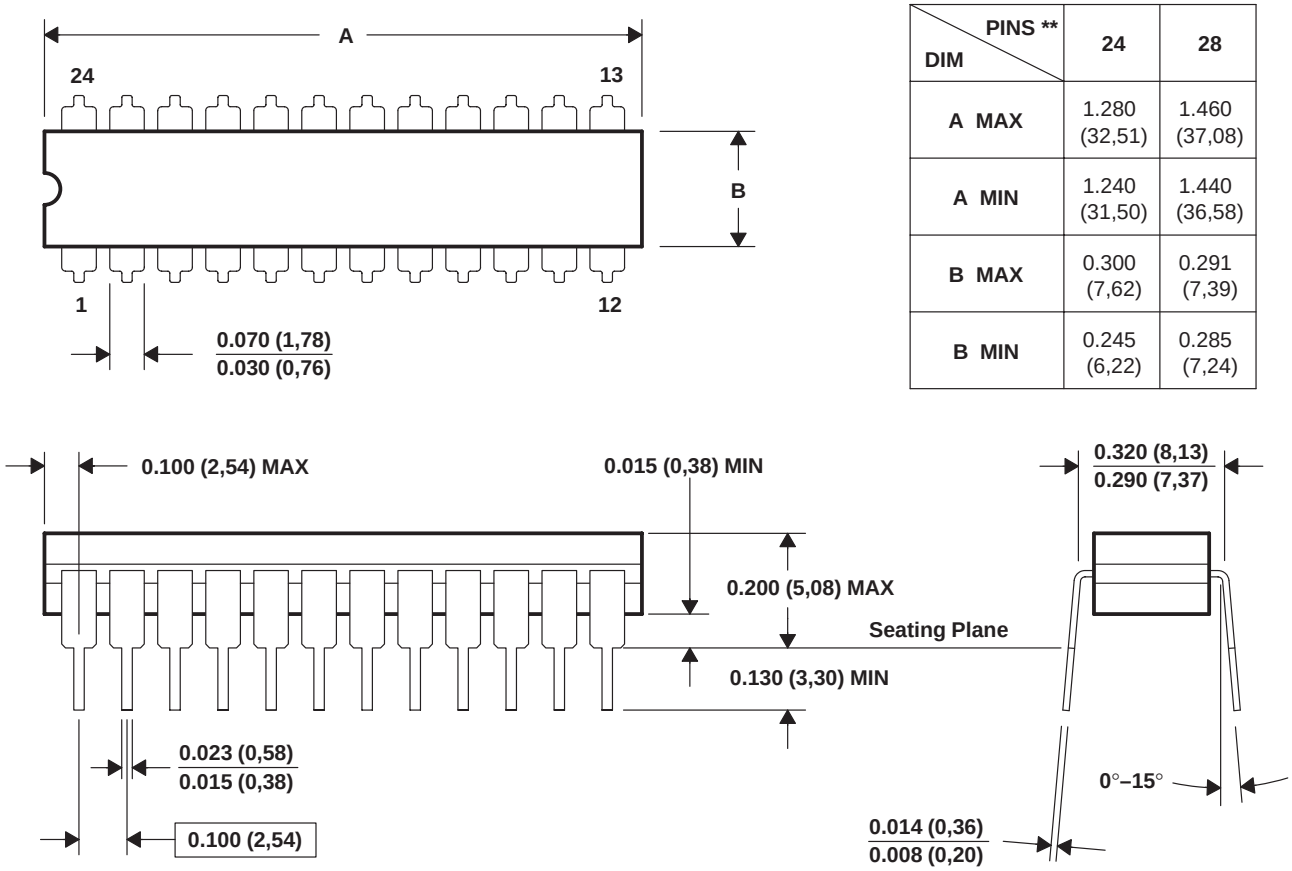

DIM \ PINS **	24	28
A MAX	1.280 (32,51)	1.460 (37,08)
A MIN	1.240 (31,50)	1.440 (36,58)
B MAX	0.300 (7,62)	0.291 (7,39)
B MIN	0.245 (6,22)	0.285 (7,24)

NOTES: A. All linear dimensions are in inches (millimeters).
B. This drawing is subject to change without notice.
C. This package can be hermetically sealed with a ceramic lid using glass frit.
D. Index point is provided on cap for terminal identification.
E. Falls within MIL STD 1835 GDIP3-T24, GDIP4-T28, and JEDEC MO-058 AA, MO-058 AB

FK (S–CQCC–N**) LEADLESS CERAMIC CHIP CARRIER

28 TERMINAL SHOWN

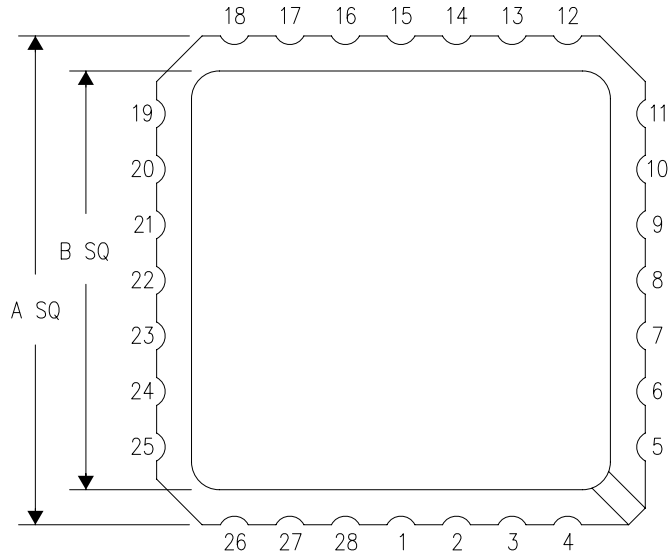

NO. OF TERMINALS **	A		B	
	MIN	MAX	MIN	MAX
20	0.342 (8,69)	0.358 (9,09)	0.307 (7,80)	0.358 (9,09)
28	0.442 (11,23)	0.458 (11,63)	0.406 (10,31)	0.458 (11,63)
44	0.640 (16,26)	0.660 (16,76)	0.495 (12,58)	0.560 (14,22)
52	0.740 (18,78)	0.761 (19,32)	0.495 (12,58)	0.560 (14,22)
68	0.938 (23,83)	0.962 (24,43)	0.850 (21,6)	0.858 (21,8)
84	1.141 (28,99)	1.165 (29,59)	1.047 (26,6)	1.063 (27,0)

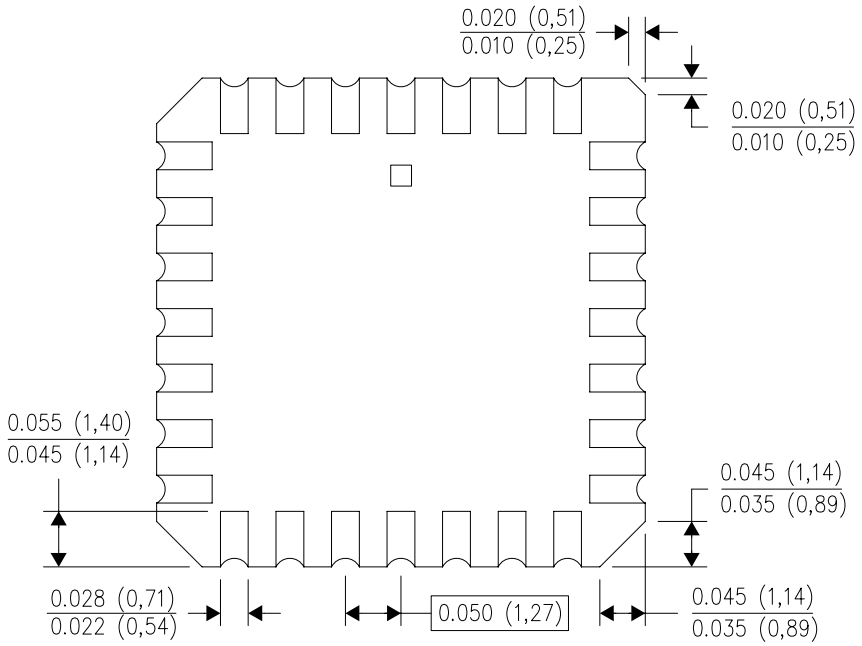

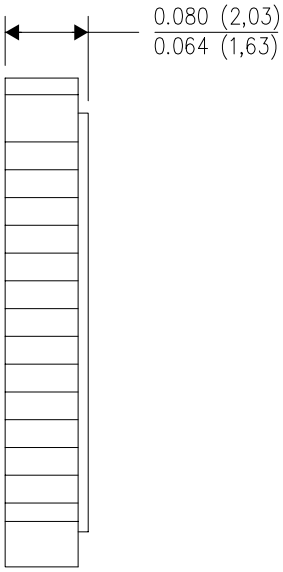

4040140/D 01/11

NOTES:
A. All linear dimensions are in inches (millimeters).
B. This drawing is subject to change without notice.
C. This package can be hermetically sealed with a metal lid.
D. Falls within JEDEC MS–004

DW (R–PDSO–G28) PLASTIC SMALL OUTLINE

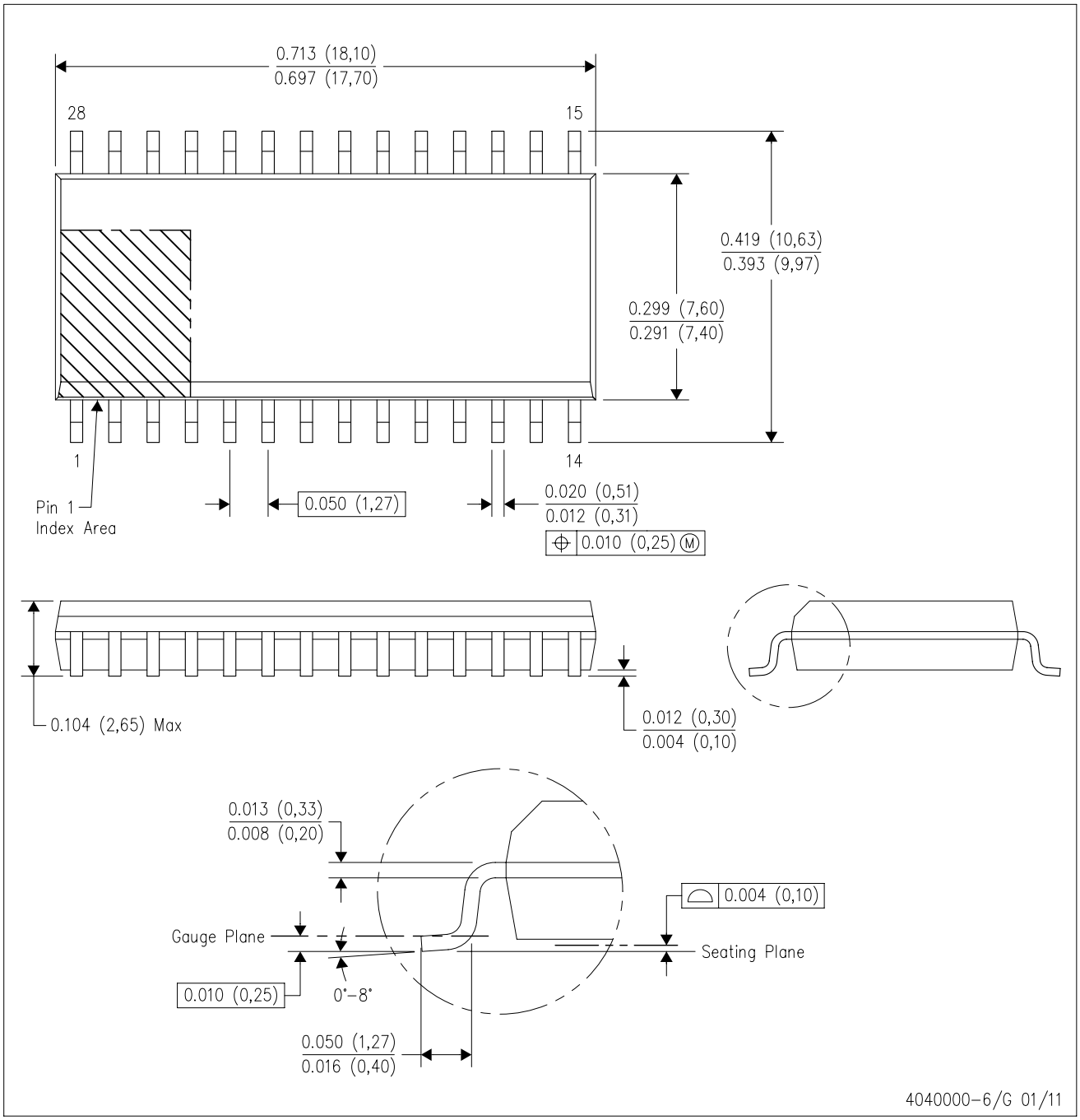

NOTES:
A. All linear dimensions are in inches (millimeters). Dimensioning and tolerancing per ASME Y14.5M–1994.
B. This drawing is subject to change without notice.
C. Body dimensions do not include mold flash or protrusion not to exceed 0.006 (0,15).
D. Falls within JEDEC MS–013 variation AE.

DW (R-PDSO-G28) PLASTIC SMALL OUTLINE

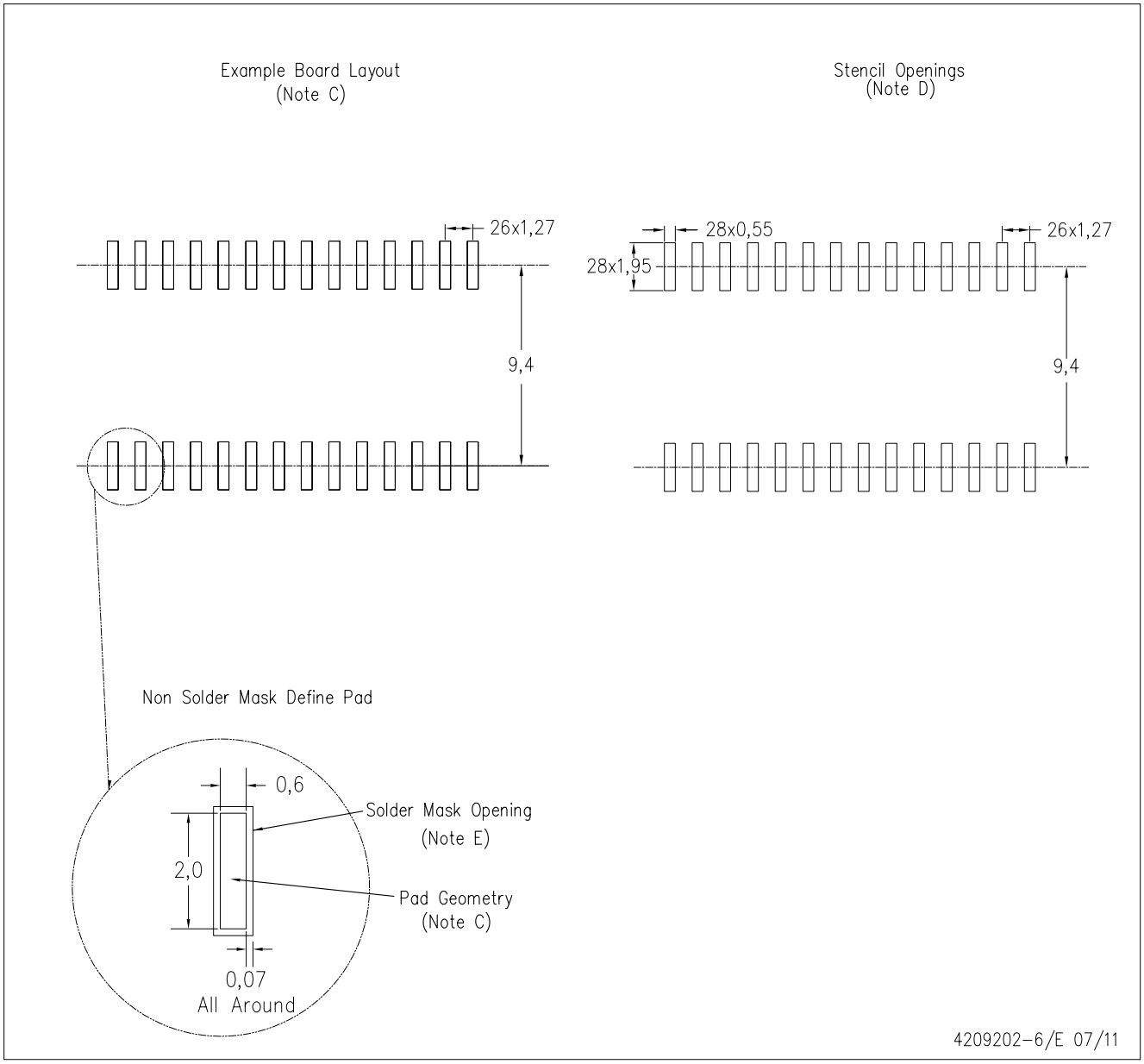

NOTES:
A. All linear dimensions are in millimeters.
B. This drawing is subject to change without notice.
C. Refer to IPC7351 for alternate board design.
D. Laser cutting apertures with trapezoidal walls and also rounding corners will offer better paste release. Customers should contact their board assembly site for stencil design recommendations. Refer to IPC-7525
E. Customers should contact their board fabrication site for solder mask tolerances between and around signal pads.

DL (R-PDSO-G)** **PLASTIC SMALL-OUTLINE PACKAGE**

48 PINS SHOWN

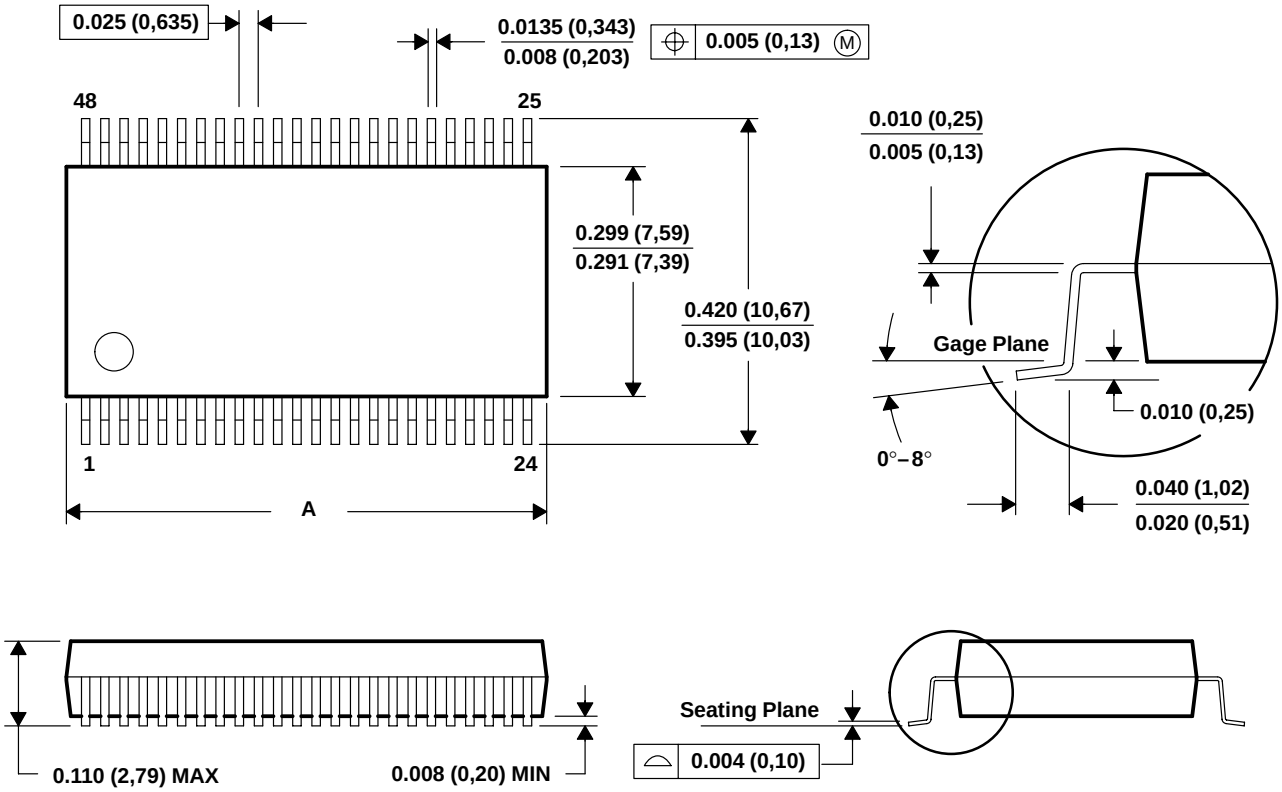

DIM \ PINS **	28	48	56
A MAX	0.380 (9,65)	0.630 (16,00)	0.730 (18,54)
A MIN	0.370 (9,40)	0.620 (15,75)	0.720 (18,29)

4040048/E 12/01

NOTES: A. All linear dimensions are in inches (millimeters).
B. This drawing is subject to change without notice.
C. Body dimensions do not include mold flash or protrusion not to exceed 0.006 (0,15).
D. Falls within JEDEC MO-118

IMPORTANT NOTICE

Texas Instruments Incorporated and its subsidiaries (TI) reserve the right to make corrections, modifications, enhancements, improvements, and other changes to its products and services at any time and to discontinue any product or service without notice. Customers should obtain the latest relevant information before placing orders and should verify that such information is current and complete. All products are sold subject to TI's terms and conditions of sale supplied at the time of order acknowledgment.

TI warrants performance of its hardware products to the specifications applicable at the time of sale in accordance with TI's standard warranty. Testing and other quality control techniques are used to the extent TI deems necessary to support this warranty. Except where mandated by government requirements, testing of all parameters of each product is not necessarily performed.

TI assumes no liability for applications assistance or customer product design. Customers are responsible for their products and applications using TI components. To minimize the risks associated with customer products and applications, customers should provide adequate design and operating safeguards.

TI does not warrant or represent that any license, either express or implied, is granted under any TI patent right, copyright, mask work right, or other TI intellectual property right relating to any combination, machine, or process in which TI products or services are used. Information published by TI regarding third-party products or services does not constitute a license from TI to use such products or services or a warranty or endorsement thereof. Use of such information may require a license from a third party under the patents or other intellectual property of the third party, or a license from TI under the patents or other intellectual property of TI.

Reproduction of TI information in TI data books or data sheets is permissible only if reproduction is without alteration and is accompanied by all associated warranties, conditions, limitations, and notices. Reproduction of this information with alteration is an unfair and deceptive business practice. TI is not responsible or liable for such altered documentation. Information of third parties may be subject to additional restrictions.

Resale of TI products or services with statements different from or beyond the parameters stated by TI for that product or service voids all express and any implied warranties for the associated TI product or service and is an unfair and deceptive business practice. TI is not responsible or liable for any such statements.

TI products are not authorized for use in safety-critical applications (such as life support) where a failure of the TI product would reasonably be expected to cause severe personal injury or death, unless officers of the parties have executed an agreement specifically governing such use. Buyers represent that they have all necessary expertise in the safety and regulatory ramifications of their applications, and acknowledge and agree that they are solely responsible for all legal, regulatory and safety-related requirements concerning their products and any use of TI products in such safety-critical applications, notwithstanding any applications-related information or support that may be provided by TI. Further, Buyers must fully indemnify TI and its representatives against any damages arising out of the use of TI products in such safety-critical applications.

TI products are neither designed nor intended for use in military/aerospace applications or environments unless the TI products are specifically designated by TI as military-grade or "enhanced plastic." Only products designated by TI as military-grade meet military specifications. Buyers acknowledge and agree that any such use of TI products which TI has not designated as military-grade is solely at the Buyer's risk, and that they are solely responsible for compliance with all legal and regulatory requirements in connection with such use.

TI products are neither designed nor intended for use in automotive applications or environments unless the specific TI products are designated by TI as compliant with ISO/TS 16949 requirements. Buyers acknowledge and agree that, if they use any non-designated products in automotive applications, TI will not be responsible for any failure to meet such requirements.

Following are URLs where you can obtain information on other Texas Instruments products and application solutions:

Products		**Applications**	
Audio	www.ti.com/audio	Communications and Telecom	www.ti.com/communications
Amplifiers	amplifier.ti.com	Computers and Peripherals	www.ti.com/computers
Data Converters	dataconverter.ti.com	Consumer Electronics	www.ti.com/consumer-apps
DLP® Products	www.dlp.com	Energy and Lighting	www.ti.com/energy
DSP	dsp.ti.com	Industrial	www.ti.com/industrial
Clocks and Timers	www.ti.com/clocks	Medical	www.ti.com/medical
Interface	interface.ti.com	Security	www.ti.com/security
Logic	logic.ti.com	Space, Avionics and Defense	www.ti.com/space-avionics-defense
Power Mgmt	power.ti.com	Transportation and Automotive	www.ti.com/automotive
Microcontrollers	microcontroller.ti.com	Video and Imaging	www.ti.com/video
RFID	www.ti-rfid.com		
OMAP Mobile Processors	www.ti.com/omap		
Wireless Connctivity	www.ti.com/wirelessconnectivity		

TI E2E Community Home Page e2e.ti.com

Mailing Address: Texas Instruments, Post Office Box 655303, Dallas, Texas 75265
Copyright © 2011, Texas Instruments Incorporated

OCEAN CHIPS
Океан Электроники
Поставка электронных компонентов

Компания «Океан Электроники» предлагает заключение долгосрочных отношений при поставках импортных электронных компонентов на взаимовыгодных условиях!

Наши преимущества:

- Поставка оригинальных импортных электронных компонентов напрямую с производств Америки, Европы и Азии, а так же с крупнейших складов мира;
- Широкая линейка поставок активных и пассивных импортных электронных компонентов (более 30 млн. наименований);
- Поставка сложных, дефицитных, либо снятых с производства позиций;
- Оперативные сроки поставки под заказ (от 5 рабочих дней);
- Экспресс доставка в любую точку России;
- Помощь Конструкторского Отдела и консультации квалифицированных инженеров;
- Техническая поддержка проекта, помощь в подборе аналогов, поставка прототипов;
- Поставка электронных компонентов под контролем ВП;
- Система менеджмента качества сертифицирована по Международному стандарту ISO 9001;
- При необходимости вся продукция военного и аэрокосмического назначения проходит испытания и сертификацию в лаборатории (по согласованию с заказчиком);
- Поставка специализированных компонентов военного и аэрокосмического уровня качества (Xilinx, Altera, Analog Devices, Intersil, Interpoint, Microsemi, Actel, Aeroflex, Peregrine, VPT, Syfer, Eurofarad, Texas Instruments, MS Kennedy, Miteq, Cobham, E2V, MA-COM, Hittite, Mini-Circuits, General Dynamics и др.);

Компания «Океан Электроники» является официальным дистрибьютором и эксклюзивным представителем в России одного из крупнейших производителей разъемов военного и аэрокосмического назначения **«JONHON»**, а так же официальным дистрибьютором и эксклюзивным представителем в России производителя высокотехнологичных и надежных решений для передачи СВЧ сигналов **«FORSTAR»**.

AVIC JONHON

«JONHON» (основан в 1970 г.)

Разъемы специального, военного и аэрокосмического назначения:

(Применяются в военной, авиационной, аэрокосмической, морской, железнодорожной, горно- и нефтедобывающей отраслях промышленности)

«FORSTAR» (основан в 1998 г.)

ВЧ соединители, коаксиальные кабели, кабельные сборки и микроволновые компоненты:

(Применяются в телекоммуникациях гражданского и специального назначения, в средствах связи, РЛС, а так же военной, авиационной и аэрокосмической отраслях промышленности).

FORSTAR®

Телефон: 8 (812) 309-75-97 (многоканальный)
Факс: 8 (812) 320-03-32
Электронная почта: ocean@oceanchips.ru
Web: http://oceanchips.ru/
Адрес: 198099, г. Санкт-Петербург, ул. Калинина, д. 2, корп. 4, лит. А