Ordering number : EN7232B

SANYO Semiconductors
DATA SHEET

An ON Semiconductor Company

LB1940T
LB1940U

Monolithic Digital IC
2-ch H-Bridge Constant Current Driver

Overview

The LB1940T and LB1940U are 2-phase exciter type bipolar stepper motor driver ICs that feature low-voltage, (supporting 3V battery) and low current operation with low saturation voltage. These ICs enable constant-current control of actuators, and are optimal for driving the actuators of PC peripherals such as USB compatible scanners, FDDs, and printers, as well as for controlling the shutter, iris, and AF of a digital still camera.

Features

- Low-voltage driving
  2-power source type: VS = 1.6 to 7.5V, V_{DD} = 1.9 to 6.5V
  Single power source type: VS = V_{D}D = 1.9 to 7.5V
- Low saturation output: V_O(sat) = 0.3V at I_O of 200mA
- Constant-current control
- Built-in reference voltage (Vref = 0.9V)
- Small-sized, low-profile package (LB1940T: TSSOP20; 225mil; thickness (t) = 1.2mm max.)
  (LB1940U: MSOP20; thickness (t) = 0.85mm max.)

Specifications

Absolute Maximum Ratings at Ta = 25°C

Parameter	Symbol	Conditions	Ratings	Unit
Maximum supply voltage	VB max	VS1, VS2, V_{DD}	-0.3 to +10.5	V
Output applied voltage	V_{OUT} max	OUT1, OUT2, OUT3, OUT4	-0.3 to +10.5	V
Output Current	I_O max		400	mA
Input applied voltage	V_{IN} max	ENA1, ENA2, IN1, IN2, VC	-0.3 to +10.5	V
Allowable power dissipation	Pd max	Mounted on a specified board *	800	mW
Operating temperature	Topr		-20 to +85	°C
Storage temperature	Tstg		-55 to +150	°C

* Mounted on a Specified board: 114.3mm×76.1mm×1.6mm, glass epoxy

■ Any and all SANYO Semiconductor Co.,Ltd. products described or contained herein are, with regard to "standard application", intended for the use as general electronics equipment. The products mentioned herein shall not be intended for use for any "special application" (medical equipment whose purpose is to sustain life, aerospace instrument, nuclear control device, burning appliances, transportation machine, traffic signal system, safety equipment etc.) that shall require extremely high level of reliability and can directly threaten human lives in case of failure or malfunction of the product or may cause harm to human bodies, nor shall they grant any guarantee thereof. If you should intend to use our products for new introduction or other application different from current conditions on the usage of automotive device, communication device, office equipment, industrial equipment etc. , please consult with us about usage condition (temperature, operation time etc.) prior to the intended use. If there is no consultation or inquiry before the intended use, our customer shall be solely responsible for the use.

■ Specifications of any and all SANYO Semiconductor Co.,Ltd. products described or contained herein stipulate the performance, characteristics, and functions of the described products in the independent state, and are not guarantees of the performance, characteristics, and functions of the described products as mounted in the customer's products or equipment. To verify symptoms and states that cannot be evaluated in an independent device, the customer should always evaluate and test devices mounted in the customer's products or equipment.

SANYO Semiconductor Co., Ltd.
http://www.sanyosemi.com/en/network/

Allowable Operating Range at Ta = 25°C

Parameter	Symbol	Conditions	Ratings			unit
			min	typ	max	
Function-guaranteed voltage range	VOPR1	V_{DD} system, VS = 2.0V	1.9		6.5	V
	VOPR2	VS system, V_{DD} = 5.0V	1.6		7.5	
Low level input threshold voltage	V_{IL}	ENA1, ENA2, IN1, IN2	-0.3		1.0	V
High level input threshold voltage	V_{IH}	ENA1, ENA2, IN1, IN2	2.0		6.0	V
VC input voltage	VC		0.19		1.0	V

Electrical Characteristics at Ta = 25°C, VS = 3V, V_{DD} = 5V

Parameter	Symbol	Conditions	Ratings			unit
			min	typ	max	
Standby current dissipation	ISTB	VS = V_{DD} = 6.5V		0.1	1.0	μA
Regulator output circuit						
VREF output voltage	VREF	I_{OL} = 0 to 1mA	0.85	0.9	0.95	V
SVDD output voltage	VSVDD	I_{OL} = 10mA	4.70	4.85		V
H bridge output circuit						
OUT output saturation voltage (at saturation control)	V_O(sat)1	V_{DD} = 5.0V, VS = 2.0V I_O = 200mA (PNP side)		0.20	0.30	V
	V_O(sat)2	V_{DD} = 5.0V, VS = 2.0V I_O = 200mA (NPN side)		0.10	0.15	V
OUT output current (at constant current control)	$I_{OUT}1$	V_{DD} = 6.0V, VC = 0.2V, VS = 3.5V R_L = 5Ω (between OUT-OUT), RFB = 2Ω	94	100	106	mA
	$I_{OUT}2$	$VC = \frac{Rb}{Ra + Rb}$ VREF (Ra = 70kΩ, Rb = 20kΩ) * V_{DD} = 6.0V, VS = 2.0V R_L = 5Ω (between OUT-OUT), RFB = 1Ω	180	200	220	mA
VS system operating current consumption	IS1	$VC = \frac{Rb}{Ra + Rb}$ VREF (Ra = 70kΩ, Rb = 20kΩ) *		1.5	3	mA
V_{DD} system operating current dissipation	$I_{DD}1$	$VC = \frac{Rb}{Ra + Rb}$ VREF (Ra = 70kΩ, Rb = 20kΩ) * ENA1 = 2V		4	7	mA
VC input current	IVC	V_{DD} = 6.0V, VS = 2.0V, VC = 1.9V	0		-1	μA
Control input circuit						
Control pin maximum input current	I_{IH}	V_{IH} = 5.5V		80	100	μA
	I_{IL}	V_{IL} = GND	-1		0	

* For Ra and Rb, refer to Application Circuit Diagram.

Package Dimensions

unit : mm (typ)

3246 [LB1940T]

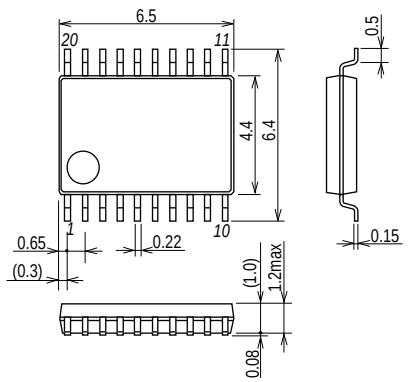

SANYO : TSSOP20(225mil)

Package Dimensions

unit : mm (typ)

3262 [LB1940U]

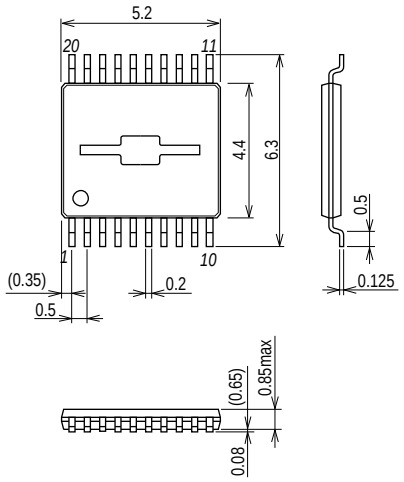

SANYO : MSOP20(225mil)

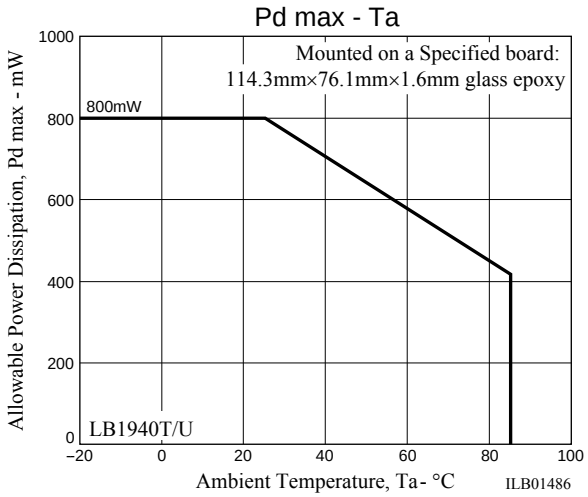

True Table

Input				Output					Mode
ENA		IN		OUT				SVDD	
1	2	1	2	1	2	3	4		
L	L								Standby (current dissipation zero)
H		H		L	H			on	Reverse rotation
		L		H	L			on	Forward rotation
	H		H			L	H	on	Reverse rotation
			L			H	L	on	Forward rotation
A blank means “don’t care”.				A blank means “off”.					

Pin Assignment

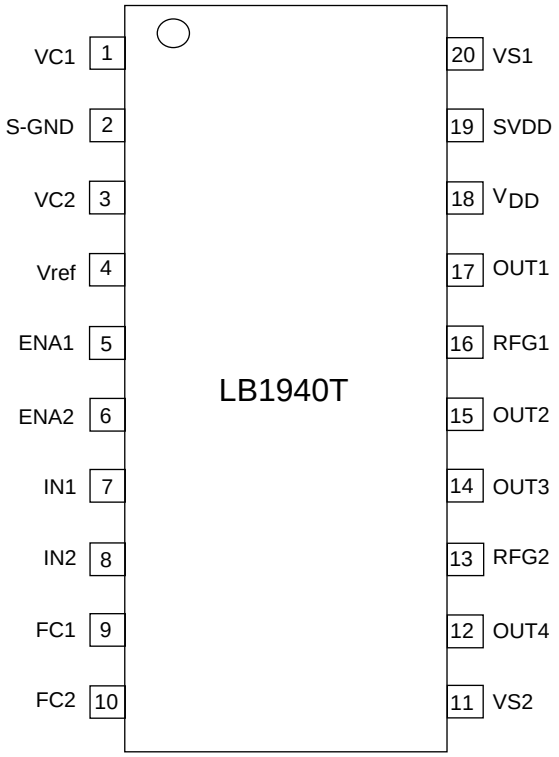

Top view

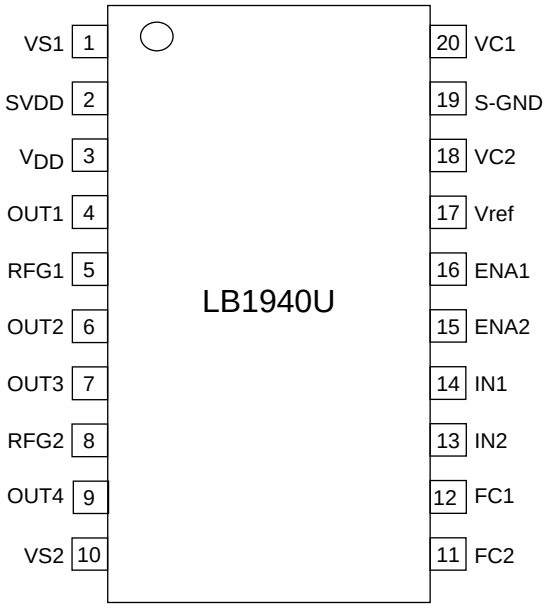

Top view

Pin Description

Pin No.		Pin Name	Description	Pin No.		Pin Name	Description
LB1940T	LB1940U			LB1940T	LB1940U		
1	20	VC1	Reference voltage input for 1ch control	11	10	VS2	Motor power supply (+)
2	19	S-GND	GND for control system	12	9	OUT4	Motor drive output 4
3	18	VC2	Reference voltage input for 2ch control	13	8	RFG2	Constant-current detection pin
4	17	Vref	Reference voltage output	14	7	OUT3	Motor drive output 3
5	16	ENA1	Signal input for 1ch control	15	6	OUT2	Motor drive output 2
6	15	ENA2	Signal input for 2ch control	16	5	RFG1	Constant-current detection pin 1
7	14	IN1	Signal input for 1ch control	17	4	OUT1	Motor drive output 1
8	13	IN2	Signal input for 2ch control	18	3	V_{DD}	Control system power supply (+)
9	12	FC1	C connection pin for 1ch phase compensation	19	2	SVDD	Control system power output
10	11	FC2	C connection pin for 2ch phase compensation	20	1	VS1	Motor power supply (+)

Block Diagram

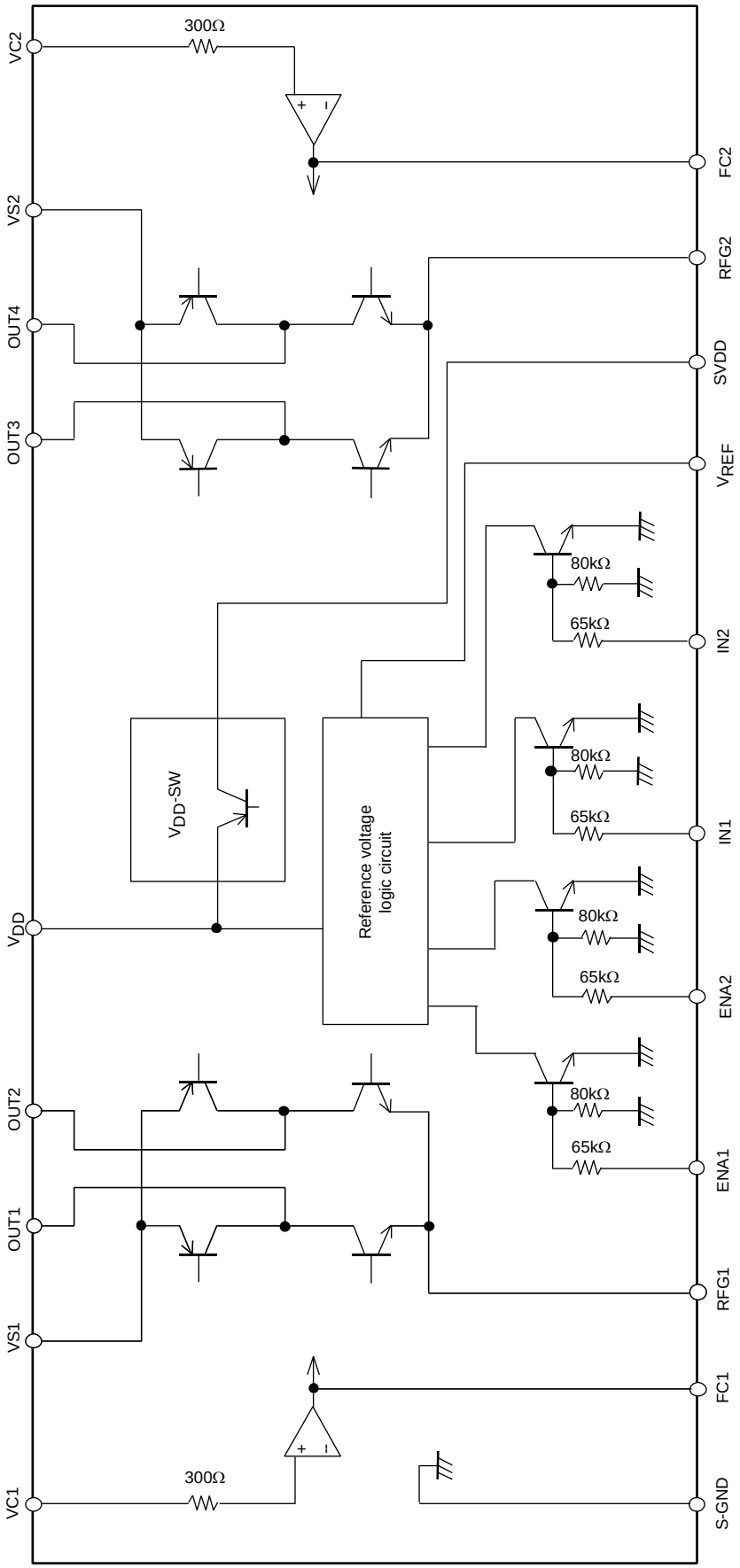

Application Circuit Diagram

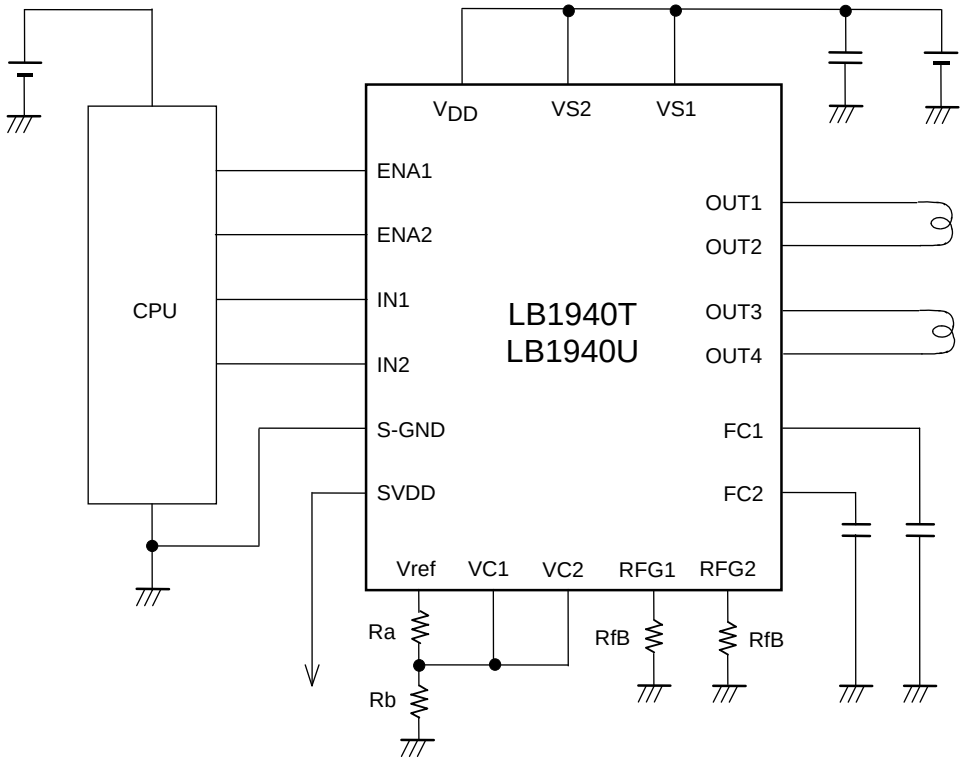

At constant-current control: The OUT current is controlled so that the RFG pin voltage is equal to the VC input pin voltage.
For example, I_{OUT} = 200mA (= 0.2V/1Ω) when VC = 0.2V and RFB = 1Ω.

*: There is no priority relationship between respective input voltages (ENA, IN) and respective supply voltages (V_{DD}, VS). For example, operation with V_{IN} = 5V, V_{DD} = 3V, VS = 2V is possible.

Note: The input voltage range to the reference voltage input pin VC for constant-current setting is from 0.19V to 1.0V.

Constant current setting

The composition of the constant-control circuit of this IC is as shown in the figure below.

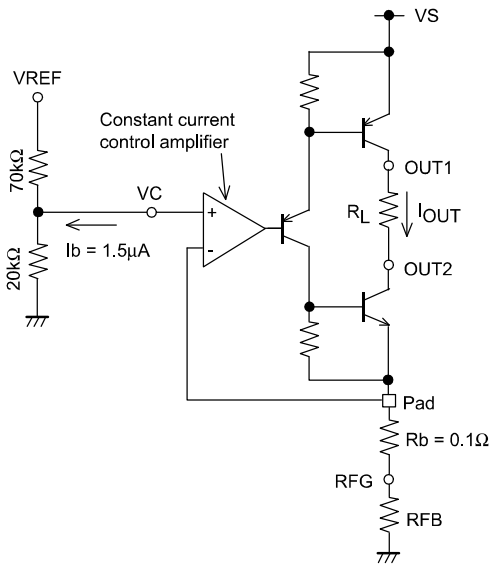

The voltage entered in the VC pin is entered as a reference to the "+" side input of the constant-current control amplifier.
The "-" side of this constant-current control amplifier is connected to the RFG pin via the wire bonded resistor Rb (= 0.1Ω).
The constant-current control circuit consists of comparison of the voltage generated at the external current detection resistor with the above reference voltage.

In addition, since the bias current Ib (= 1.5μA) flows out of the positive (+) input of the constant current control amplifier during the constant current control, if the voltage is input to the VC pin by dividing the VREF voltage by 4.5 according to the dividing resistance (70kΩ and 20kΩ) as shown in the figure, the formula for calculating the VC voltage is as follows :

$$VC = VREF/4.5 + Ib \times 20k\Omega = VREF/4.5 + 0.03$$

Therefore, the theoretical equation to set the constant current I_{OUT} is as follows:

$$I_{OUT} = VC/(RFB+Rb) = (VREF/4.5+0.03)/(RFB+Rb)$$

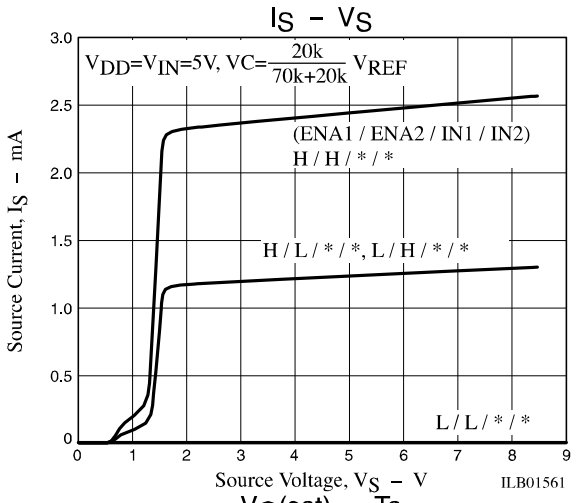
IS – VS
VDD=VIN=5V, VC=20k/70k+20k VREF
(ENA1 / ENA2 / IN1 / IN2)
H / H / * / *
H / L / * / *, L / H / * / *
L / L / * / *
Source Current, IS – mA
Source Voltage, VS – V
ILB01561

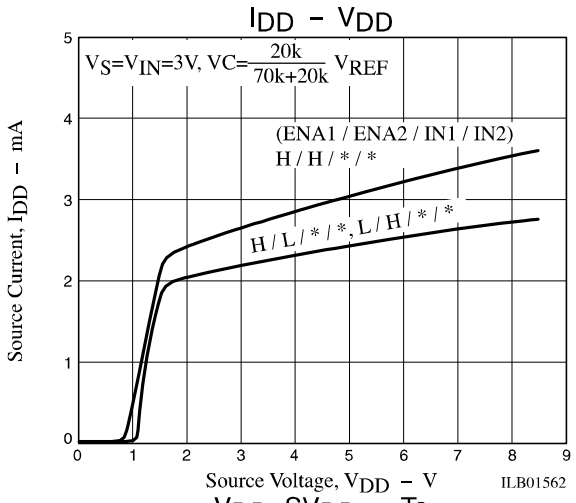
IDD – VDD
VS=VIN=3V, VC=20k/70k+20k VREF
(ENA1 / ENA2 / IN1 / IN2)
H / H / * / *
H / L / * / *, L / H / * / *
Source Current, IDD – mA
Source Voltage, VDD – V
ILB01562

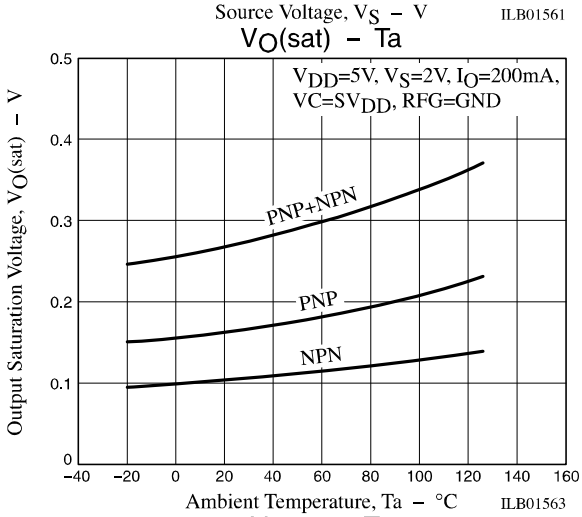
VO(sat) – Ta
VDD=5V, VS=2V, IO=200mA,
VC=SVDD, RFG=GND
PNP+NPN
PNP
NPN
Output Saturation Voltage, VO(sat) – V
Ambient Temperature, Ta – °C
ILB01563

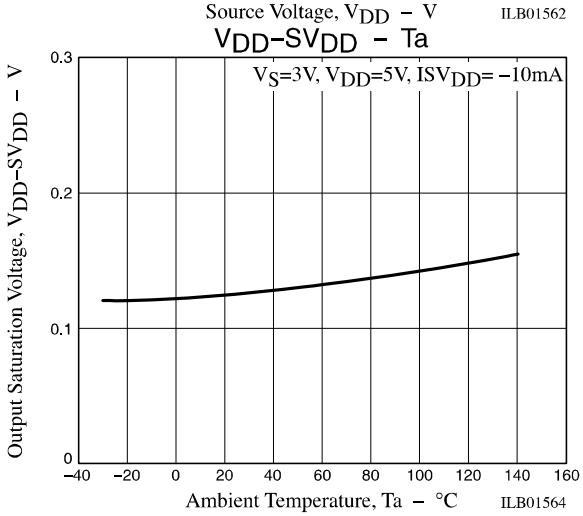
VDD–SVDD – Ta
VS=3V, VDD=5V, ISVDD= –10mA
Output Saturation Voltage, VDD–SVDD – V
Ambient Temperature, Ta – °C
ILB01564

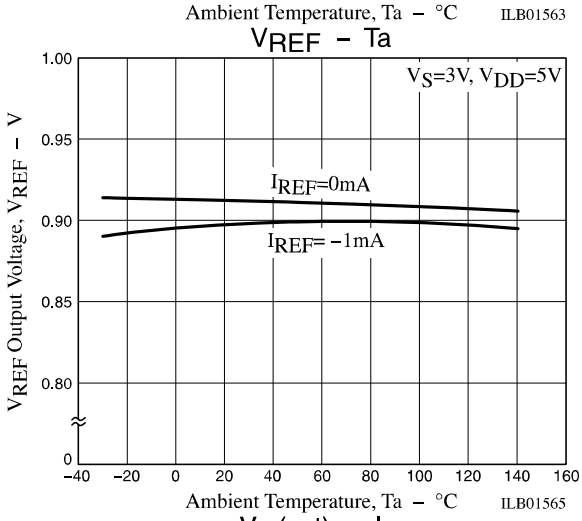
VREF – Ta
VS=3V, VDD=5V
IREF=0mA
IREF= –1mA
VREF Output Voltage, VREF – V
Ambient Temperature, Ta – °C
ILB01565

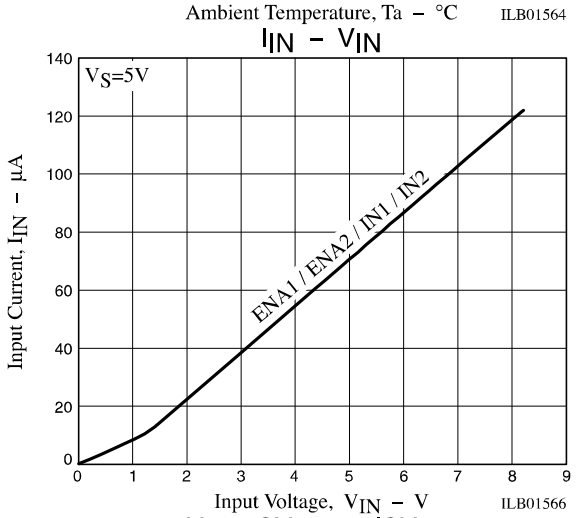
IIN – VIN
VS=5V
ENA1 / ENA2 / IN1 / IN2
Input Current, IIN – µA
Input Voltage, VIN – V
ILB01566

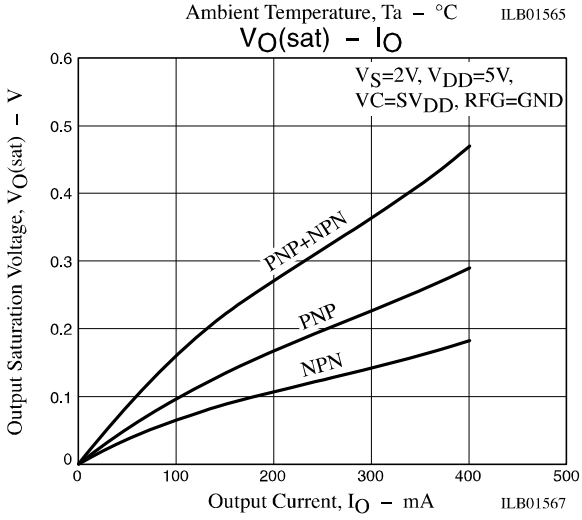
VO(sat) – IO
VS=2V, VDD=5V,
VC=SVDD, RFG=GND
PNP+NPN
PNP
NPN
Output Saturation Voltage, VO(sat) – V
Output Current, IO – mA
ILB01567

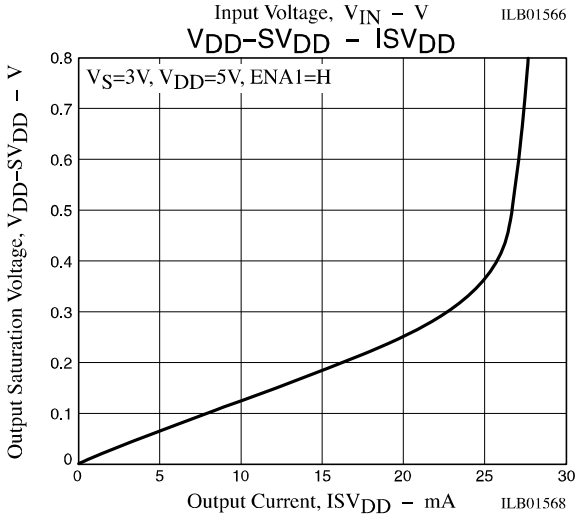
VDD–SVDD – ISVDD
VS=3V, VDD=5V, ENA1=H
Output Saturation Voltage, VDD–SVDD – V
Output Current, ISVDD – mA
ILB01568

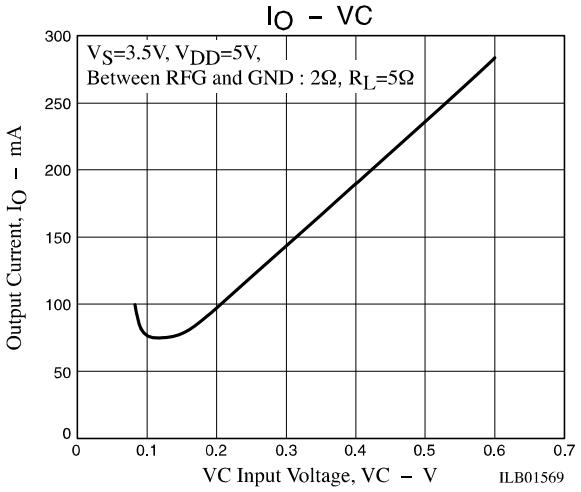

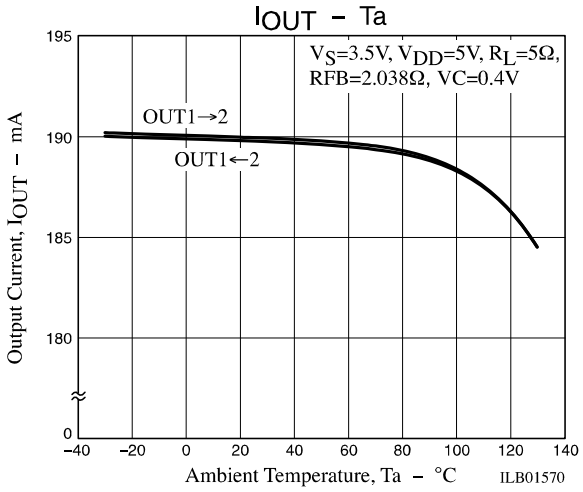

- SANYO Semiconductor Co.,Ltd. assumes no responsibility for equipment failures that result from using products at values that exceed, even momentarily, rated values (such as maximum ratings, operating condition ranges, or other parameters) listed in products specifications of any and all SANYO Semiconductor Co.,Ltd. products described or contained herein.
- Regarding monolithic semiconductors, if you should intend to use this IC continuously under high temperature, high current, high voltage, or drastic temperature change, even if it is used within the range of absolute maximum ratings or operating conditions, there is a possibility of decrease reliability. Please contact us for a confirmation.
- SANYO Semiconductor Co.,Ltd. strives to supply high-quality high-reliability products, however, any and all semiconductor products fail or malfunction with some probability. It is possible that these probabilistic failures or malfunction could give rise to accidents or events that could endanger human lives, trouble that could give rise to smoke or fire, or accidents that could cause damage to other property. When designing equipment, adopt safety measures so that these kinds of accidents or events cannot occur. Such measures include but are not limited to protective circuits and error prevention circuits for safe design, redundant design, and structural design.
- In the event that any or all SANYO Semiconductor Co.,Ltd. products described or contained herein are controlled under any of applicable local export control laws and regulations, such products may require the export license from the authorities concerned in accordance with the above law.
- No part of this publication may be reproduced or transmitted in any form or by any means, electronic or mechanical, including photocopying and recording, or any information storage or retrieval system, or otherwise, without the prior written consent of SANYO Semiconductor Co.,Ltd.
- Any and all information described or contained herein are subject to change without notice due to product/technology improvement, etc. When designing equipment, refer to the "Delivery Specification" for the SANYO Semiconductor Co.,Ltd. product that you intend to use.
- Upon using the technical information or products described herein, neither warranty nor license shall be granted with regard to intellectual property rights or any other rights of SANYO Semiconductor Co.,Ltd. or any third party. SANYO Semiconductor Co.,Ltd. shall not be liable for any claim or suits with regard to a third party's intellectual property rights which has resulted from the use of the technical information and products mentioned above.

This catalog provides information as of December, 2012. Specifications and information herein are subject to change without notice.

OCEAN CHIPS
Океан Электроники
Поставка электронных компонентов

Компания «Океан Электроники» предлагает заключение долгосрочных отношений при поставках импортных электронных компонентов на взаимовыгодных условиях!

Наши преимущества:

- Поставка оригинальных импортных электронных компонентов напрямую с производств Америки, Европы и Азии, а так же с крупнейших складов мира;
- Широкая линейка поставок активных и пассивных импортных электронных компонентов (более 30 млн. наименований);
- Поставка сложных, дефицитных, либо снятых с производства позиций;
- Оперативные сроки поставки под заказ (от 5 рабочих дней);
- Экспресс доставка в любую точку России;
- Помощь Конструкторского Отдела и консультации квалифицированных инженеров;
- Техническая поддержка проекта, помощь в подборе аналогов, поставка прототипов;
- Поставка электронных компонентов под контролем ВП;
- Система менеджмента качества сертифицирована по Международному стандарту ISO 9001;
- При необходимости вся продукция военного и аэрокосмического назначения проходит испытания и сертификацию в лаборатории (по согласованию с заказчиком);
- Поставка специализированных компонентов военного и аэрокосмического уровня качества (Xilinx, Altera, Analog Devices, Intersil, Interpoint, Microsemi, Actel, Aeroflex, Peregrine, VPT, Syfer, Eurofarad, Texas Instruments, MS Kennedy, Miteq, Cobham, E2V, MA-COM, Hittite, Mini-Circuits, General Dynamics и др.);

Компания «Океан Электроники» является официальным дистрибьютором и эксклюзивным представителем в России одного из крупнейших производителей разъемов военного и аэрокосмического назначения **«JONHON»**, а так же официальным дистрибьютором и эксклюзивным представителем в России производителя высокотехнологичных и надежных решений для передачи СВЧ сигналов **«FORSTAR»**.

AVIC JONHON

«JONHON» (основан в 1970 г.)

Разъемы специального, военного и аэрокосмического назначения:

(Применяются в военной, авиационной, аэрокосмической, морской, железнодорожной, горно- и нефтедобывающей отраслях промышленности)

«FORSTAR» (основан в 1998 г.)

ВЧ соединители, коаксиальные кабели, кабельные сборки и микроволновые компоненты:

(Применяются в телекоммуникациях гражданского и специального назначения, в средствах связи, РЛС, а так же военной, авиационной и аэрокосмической отраслях промышленности).

FORSTAR®

Телефон: 8 (812) 309-75-97 (многоканальный)
Факс: 8 (812) 320-03-32
Электронная почта: ocean@oceanchips.ru
Web: http://oceanchips.ru/
Адрес: 198099, г. Санкт-Петербург, ул. Калинина, д. 2, корп. 4, лит. А